DAIKIN
AIR INTELLIGENCE™

DAIKIN RMXS SERIES MULTI-ZONE HEATING & COOLING SYSTEMS

4-TON, 8-ZONE SYSTEMS
Up to 18.8 SEER / Up to 11.3 HSPF / Up to 10.3 EER
VARIABLE-SPEED COMPRESSOR
RESIDENTIAL AND LIGHT COMMERCIAL APPLICATIONS

Today, the air is perfect. Perfect temperature. Perfect humidity. Perfectly clean and fresh, like just after a rainstorm. And the only thing more perfect than this outdoor scenario is that it's all happening inside. Because that's where we work. That's where we play, where we sleep, where we truly live.

And that's why at Daikin, we aim to make the air inside as refreshing as the outside. Better comfort. Better control and efficiency. Better quality. So you can create your own unique ecosystem. And everyday is perfect.
Inside and out.

Daikin Multi-Zone Heat Pump

INVERTER, VARIABLE-SPEED COMPRESSOR

AIR INTELLIGENCE™ built-inside

A better understanding of how people inhabit their living spaces has led to products designed to create indoor environments that help use energy resources more effectively. Heat pumps extract or reject heat from the outside air, even in cold weather. They use an electrically powered compressor and are extremely effective at heating and cooling an apartment or a house. Daikin heat pumps are quiet and discreet, and use state-of-the-art technology to keep your energy bills low. With a Daikin heat pump, a large portion of the energy used to heat or cool your home comes from the outside air, a free and infinitely renewable resource.

Comfort

We offer a wide range of products, and always provide you with the ideal solution, whether for an apartment, condo or a house. Our units are whisper quiet and, with their specially designed airflow pattern, they create your ideal indoor climate.

Daikin units are designed to include features that let you create your own unique ecosystem. From the wide-angle louver design to the auto-swing and comfortable mode controller settings, effective heating and cooling is ensured throughout the space.

Smart inverter technology

Integrated with an inverter variable-speed compressor, Daikin systems deliver the capacity required to maintain desired room conditions, typically reducing energy consumption by up to 30% or more (compared to traditional fixed-speed ducted systems). This technology minimizes temperature fluctuations and provides continuous cooling and heating comfort.

Energy efficiency

Our products are designed to be highly efficient all year round, and their low energy consumption is reflected in low energy bills for you.

Control**

Our expertise makes life easier for you, allowing you to control your system via a smart phone app or a user-friendly remote control.

Reliability

Daikin products are renowned for their reliability. And you can rely on service to match, with industry leading warranties.*

12 YEAR PARTS LIMITED WARRANTY

* Complete warranty details available from your local dealer/contractor or at www.daikincomfort.com. To receive the 12-Year Parts Limited Warranty, online registration must be completed within 60 days of installation. Online registration is not required in California or Quebec.

** Comfort Control app not compatible with FDMQ or *VISTA*™ indoor units.

RMXS Series Multi-Zone Heating and Cooling Systems

8-zone systems provide high efficiency and comfort

The 8-zone multi-zone system is the ultimate, flexible solution for individual zone comfort. Connecting up to eight indoor units to a single outdoor unit reduces installation space and costs while maximizing comfort and energy savings. With a choice of six indoor unit types in a wide range of capacities, the 8-zone multi-zone allows mixed and matched combinations for absolute comfort in almost any residential or light commercial application.

Premium comfort features:

- Energy Efficient – Up to 18.8 SEER, up to 11.3 HSPF, up to 10.3 EER – Variable-speed inverter compressor
- Cooling Range 23° - 115°F
- Heating Range 5° - 60°F

Ideal solution for:

- Entire homes
- Multiple zones
- New construction
- Renovations
- Multi-family

Outdoor unit features:

Anti-Corrosion Treatment on Heat Exchanger

Quick Warming Function – Prevents the compressor from pumping liquid refrigerant in low-ambient conditions.

Automatic Defrosting – Sensor performs automatic defrosting of the outdoor heat exchanger if necessary, ensuring optimum heating performance.

Outdoor Unit Quiet Operation – Outdoor unit sound levels can be reduced by 3dB for times when quieter operation is needed.

Compatible indoor units:

EMURA™ – Designed to perfectly balance technological capability and the beauty of aerodynamics

- Iconic award winning design and engineering excellence
- Elegant finish in pure matte white or modern silver
- Two-area intelligent eye sensor controls comfort and allows for energy savings during unoccupied periods
- Titanium apatite photo-catalytic air purification

VISTA™ – Unique design that integrates seamlessly into the ceiling

- Iconic award wining design and engineering excellence
- Elegant finish in white or silver / white combination
- DC fan motor and two optional intelligence sensors for energy efficiency

FTXS – Discreet wall mounted unit providing high efficiency and comfort

- Discreet, stylish front panel blends easily with the wall, and matches all interior decors
- Dry program allows humidity levels to be reduced without variations in room temperature
- Intelligent Eye function reduces heating or cooling operation during unoccupied periods

FVXS – Floor mounted unit for optimal heating comfort thanks to dual airflow

- Its low height enables the unit to fit perfectly beneath a window
- Can be installed against a wall or recessed
- Vertical auto swing moves the louver up and down for efficient air and temperature distribution

FDMQ – Ducted Concealed Indoor Unit capable of up to .6 esp

- Higher external static pressure capabilities allow for longer duct runs and easily implementing high MERV filters
- Drain pan inspection port makes it easy to observe drain pan conditions
- Rear or bottom return air configurations for installation flexibility

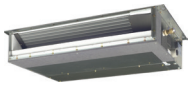

FDXS/CDXS – Slim Ducted Concealed Ceiling Unit capable of up to 0.18 esp

- External static pressure facilitates unit's use with minimal length of duct runs
- Discretely concealed in the ceiling: only the suction and discharge grills are visible
- DC fan motor for low energy consumption

Knowledge is power

In general, system performance is measured by a higher Seasonal Energy Efficiency Ratio (SEER) and Energy Efficiency Ratio (EER). Higher ratings mean lower operating costs. Similarly, a higher rated Heating Seasonal Performance Factor (HSPF) and Coefficient of Performance (COP) means a more efficient air-source heat pump.

Up to

18.8 SEER	**10.3 EER**
11.3 HSPF	**3.0 COP** (Coefficient of Performance)

Why is it important?

The COP of a heat pump is the ratio of: COP= $^{\text{energy out}}/_{\text{energy in}}$

When the COP is >1, the result is a system providing more heating energy than energy consumed. As the COP increases, the higher the efficiency — resulting in lower utility costs.

Multi-Zone Heat Pump Efficiency Ratings

COP	Oil	Natural Gas	Electricity	RMXS
	.85	.95	1.00	Up to 3.0 (Multi-Zone)

Individual comfort and control

Daikin systems come standard with an infrared remote controller allowing you to access all functions at the click of a button.

From anywhere in the world. Or your living room.*

It can happen to anyone. You forgot to change the temperature of your heat pump system or air conditioner before leaving the house, or you will be delayed returning home and wish to avoid needlessly heating or cooling your home. What in the past would have resulted in wasted energy is no longer a problem. With the new Daikin Comfort Control App, you are always in control. You can use your tablet or smart-phone to access your Daikin system via the internet.

*Comfort Control app not compatible with FDMQ or *VISTA*™ indoor units.

RMXS Series Specifications

Model			RMXS48LVJU	
			Cooling	Heating
Capacity		Btu/h	48,000	54,000
COP Rated (Min. - Max.)			3.0 - 3.9	
EER Rated (Min. - Max.)			9.3 - 10.3	
SEER / HSPF			14.1 - 18.8 / 9.6 - 11.3	
Compressor	Motor Output	kW	3	
Refrigerant	Type		R-410A	
	Charge	lbs. (kg)	8.8 (4.0)	
Fan	Motor Output	kW	0.070 x 2	
	Airflow rate	cfm	3740	
Dimension (H × W × D)		in. (mm)	52-15/16 x 35-7/16 x 12-5/8 (1,345 x 900 x 320)	
Weight		lbs. (kg)	283 (129)	
Piping Connections	Liquid	in. (mm)	3/8 (9.5) C1220T (Flare Connection)	
	Gas		3/4 (19.1) C1220T (Brazing Connection)	
Operating Range - Cooling		°F DB	23 ° - 115 ° F	
Operating Range - Heating		°F WB	5 ° - 60 ° F	

Model				BPMKS048A2U	BPMKS049A3U
Power Consumption			W	10	10
Running Current			A	0.05	0.05
Refrigerant Type				R-410A	
Heat insulation				Both Liquid and Gas Pipes	
Min. Combination			Btu/h	7,000	
Max. Combination			Btu/h	48,000	62,000
Dimension (H × W × D)			in. (mm)	7-1/16 x 11-9/16 (26-11/16)* 13-3/4 (180 x 294 [678]* x 350	
Weight			lbs. (kg)	18 (8)	20 (9)
Piping Connections	Liquid	O.U. side	in. (mm)	Ø 3/8 (Ø 9.5) x 1	
		I.U. side		Ø 1/4 (Ø 6.4) x 2	Ø 1/4 (Ø 6.4) x 3
	Gas	O.U. side		Ø 5/8 (Ø 15.9) x 1	
		I.U. side		Ø 5/8 (Ø 15.9) x 2	Ø 5/8 (Ø 15.9) x 3

[ ]* :including auxiliary piping length

Unit Combination	Power Supply						Compressor		OFM	
Outdoor Unit	Hz - Volts	Voltage Range	Min	Max	MCA	MOCP	MSC	RLA	W	FLA
RMXS48LVJU	60	208	187	229	27.0	30	23.7	22.7	70 x 2	0.3 x 2
		230	207	253			21.5	20.5	70 x 2	0.3 x 2

MXS Series Performance		SEER	EER	HSPF
RMXS48LVJU	Non-Ducted	18.8	10.3	11.3
	Ducted	14.1	9.3	9.6
	Mixed	16.45	9.8	10.45

Space saving design

- More than 60% in physical space savings versus a traditional cube style outdoor unit
- More than 80% in total (including clearances) space savings versus a traditional cube style outdoor unit

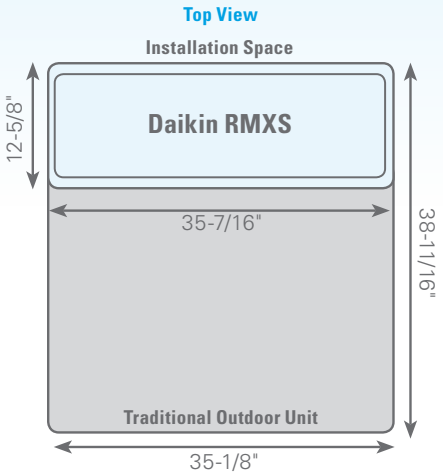

Simplified electrical wiring

The outdoor unit and BP units operate from separate 208/230V single-phase power supplies. Indoor units are powered from the BP unit and wired as Daikin's current 4 wire single split systems reducing the wiring size and easing installation

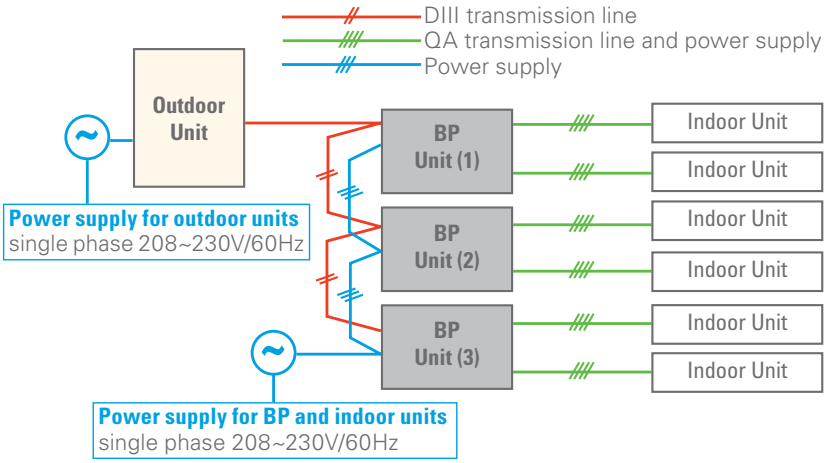

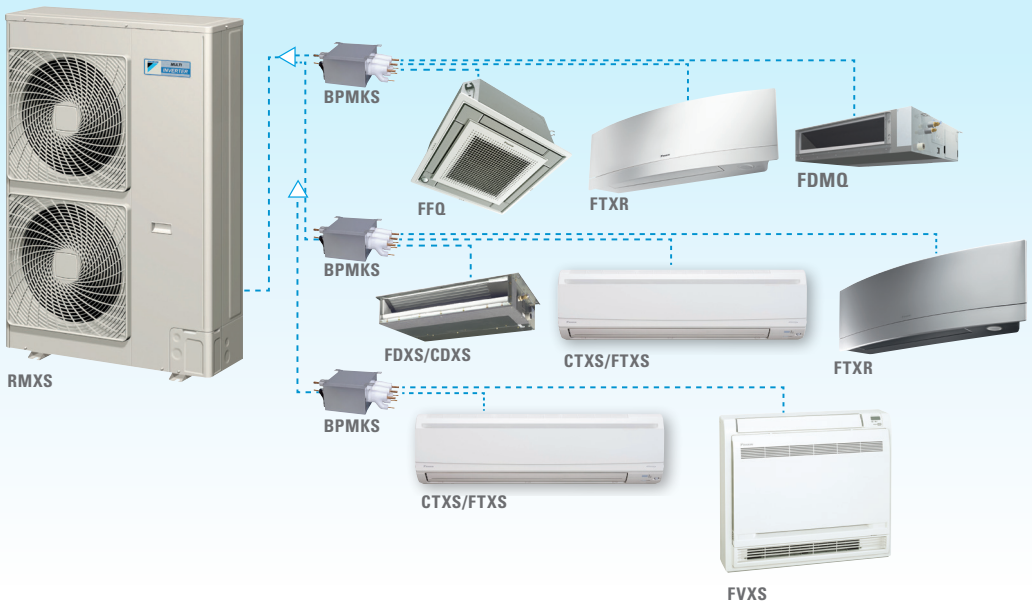

Longer refrigerant piping

Longer refrigerant piping capabilities offers much more flexibility in the choice of installation positions for the indoor units, and greatly simplifies system layout.

Piping Requirements			Allowable Length Details
Maximum allowable length	Between outdoor and BP units	Total piping length	Piping length between outdoor and BP units ≤ 180 ft (55 m) - [Example] a+b+c+d+e ≤ 180 ft
	Between BP and indoor units		Piping length between BP and indoor units: 262 ft (80 m) - [Example] f+g+h+i+j+k+l ≤ 262ft
	Between BP and indoor unit	1 room length	Piping length between BP and indoor unit ≤ 49 ft (15 m) - [Example] f, g, h, i, j, k, l ≤ 49 ft
Allowable height	Between outdoor and indoor units	Difference in height	Difference in height between outdoor and indoor units (H1) ≤ 98 ft (30 m)
	Between outdoor and BP units		Difference in height between outdoor and BP units (H2) ≤ 98 ft (30 m)
	Between BP and BP units		Difference in height between BP and BP units (H3) ≤ 49 ft (15 m)
	Between indoor and indoor units		Difference in height between indoor and indoor units (H4) ≤ 49 ft (15 m)
Minimum allowable length		Piping length	Pipe length between outdoor unit and first refrigerant branch kit (refnet joint) ≥ 16.4 ft [Example] a ≥ 16.4 ft
Allowable length after the REFNET branch			Piping length from first refrigerant branch kit (REFNET joint) to indoor unit ≤ 131 ft (40 m) [Example] unit 6: b+c+k ≤ 131 ft [Example] unit 5: b+e+j ≤ 131 ft [Example] unit 3: d+h ≤ 131 ft
Additional refrigerant calculation			R= (Total length (ft/m) of liquid piping size at ø 3/8 inch (ø 9.5 mm)) x 0.036 lb./ft (0.054 kg/m) + (Total length (ft/m) of liquid piping size at ø 1/4 inch (ø 6.4 mm))

BPMKS

- » Branch Provider Unit
- » Varies the refrigerant volume to meet the cooling or heating requirements of each room connected to the system.
- » Facilitates zone on/off and capacity control to operate rooms individually via zone temperature controls
- » Simple installation with flare nut connections

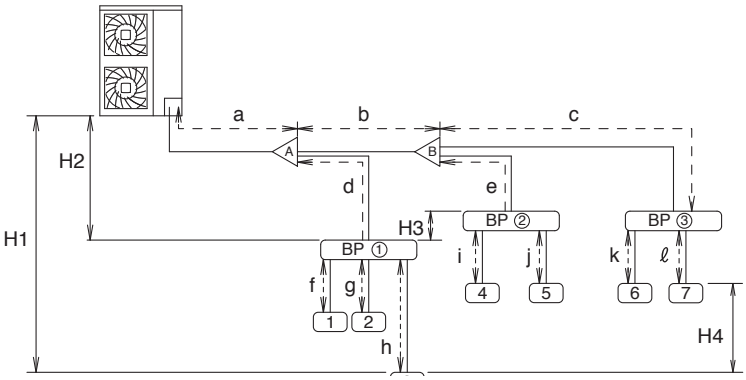

REFNET joint

- » Reduces the amount of work involved in installation and increases the reliability of the system.

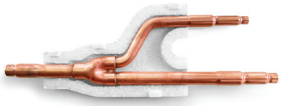

REFNET Joint

Indoor Units / Dimensions (HxWxD)	Unit Class					
	07	09	12	15	18	24
EMURA™ (Wall Mount)		FTXR09TVJUW/S	FTXR12TVJUW/S		FTXR18TVJUW/S	
		$11\frac{15}{16}$ x $39\frac{5}{16}$ x $8\frac{3}{8}$			$11\frac{15}{16}$ x $39\frac{5}{16}$ x $8\frac{3}{8}$	
VISTA™ (Ceiling Cassette)		FFQ09Q2VJU	FFQ12Q2VJU	FFQ15Q2VJU	FFQ18Q2VJU	
		10¼ x $22\frac{5}{8}$ x $22\frac{5}{8}$				
FTXS Wall Mount	CTXS07LVJU	FTXS09LVJU	FTXS12LVJU	FTXS15LVJU	FTXS18LVJU	FTXS24LVJU
	$11\frac{5}{8}$ x $31\frac{1}{2}$ x $8\frac{7}{16}$			$13\frac{3}{8}$ x $41\frac{5}{16}$ x $9\frac{3}{4}$		
FVXS Floor/Low Wall Mount		FVXS09NVJU	FVXS12NVJU	FVXS15NVJU	FVXS18NVJU	
		$23\frac{5}{8}$ x $27\frac{9}{16}$ x $8\frac{1}{4}$				
FDMQ Ducted Concealed		FDMQ09RVJU	FDMQ12RVJU	FDMQ15RVJU	FDMQ18RVJU	FDMQ24RVJU
		$9\frac{5}{8}$ × $27\frac{9}{16}$ × $31\frac{1}{2}$		$9\frac{5}{8}$ × $39\frac{3}{8}$ × $31\frac{1}{2}$		
FDXS/CDXS Slim Duct	CDXS07LVJU	FDXS09LVJU	FDXS12LVJU	CDXS15LVJU	CDXS18LVJU	CDXS24LVJU
	$7\frac{7}{8}$ x $27\frac{9}{16}$ x $24\frac{7}{16}$			$7\frac{7}{8}$ x $35\frac{7}{16}$ x $24\frac{7}{16}$		$7\frac{7}{8}$ x $43\frac{5}{16}$ x $24\frac{7}{16}$

Why choose Daikin?

Daikin is the world leader when it comes to heating and cooling. Thanks to our constant innovation in comfort, energy efficiency, control and reliability, we define the benchmarks for quality within the industry.

Expert reviews from our most important critics.

Daikin offers a wide selection of choices for energy-efficient indoor comfort. As a worldwide leader in heating and cooling technology, Daikin is also a highly-rated brand. See for yourself at www.daikincomfort.com/reviews.

Additional Information

Before purchasing this appliance, read important information about its estimated annual energy consumption, yearly operating cost, or energy efficiency rating that is available from your retailer.

Daikin and its design are trademarks owned by Daikin.