DO NOT DISCARD. THIS MANUAL HAS IMPORTANT OPERATING AND MAINTENANCE INSTRUCTIONS. LEAVE WITH THE HOMEOWNER.

MODEL:

SERIAL #:

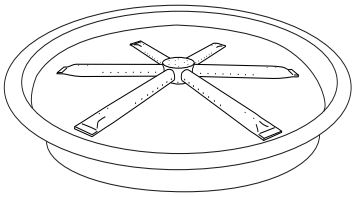

Round Pan Style

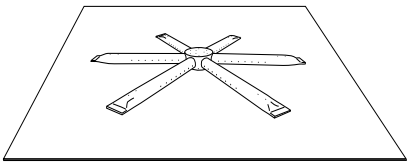

Square Disc Style

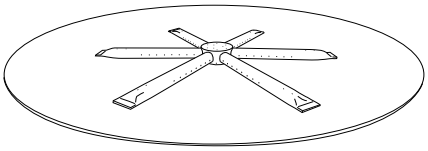

Round Disc Style

AWS Model	Description
FPB-25SFBSAWS-N	25” Natural Gas, Square Flat Disc with 22” Spur Burner
FPB-26DBSAWS-N	26” Natural Gas, Round Flat Disc with 16” Spur Burner
FPB-29DBSAWS-N	29” Natural Gas, Round Flat Disc with 22” Spur Burner
FPB-29RBSAWS-N	29” Natural Gas, Round Pan with 22” Spur Burner
FPB-30SFBSAWS-N	30” Natural Gas, Square Flat Disc with 22” Spur Burner
FPB-33RBSAWS-N	33” Natural Gas, Round Pan with 31” Spur Burner
FPB-34DBSAWS-N	34” Natural Gas, Round Flat Disc with 31” Spur Burner
FPB-40SFBSAWS-N	40” Natural Gas, Square Flat Disc with 36” Spur Burner
FPB-44DBSAWS-N	44” Natural Gas, Round Flat Disc with 36” Spur Burner

Fire Pit Burners (FPB) with All Weather Electronic Ignition System (AWS)

Installation and Operating Instructions

IF YOU CANNOT READ OR UNDERSTAND THESE INSTALLATION INSTRUCTIONS DO NOT ATTEMPT TO INSTALL OR OPERATE THIS APPLIANCE

INSTALLATION PRECAUTION:

This system requires a minimum 18-square inches (per side) of cross ventilation. Failure to provide proper ventilation will void the warranty.

Warning: For Outdoor Use Only

NATIONAL FIREPLACE INSTITUTE NFI CERTIFIED www.nficertified.org

We recommend that our gas hearth products be installed and serviced by professionals who are certified in the U.S. by the National Fireplace Institute® (NFI) as NFI Gas Specialists.

DANGER

CARBON MONOXIDE HAZARD

This appliance can produce carbon monoxide which has no odor.

Using it in an enclosed area can kill you.

Never use this appliance in an enclosed space such as a camper, tent, car or home.

DANGER

If you smell gas:

1. Shut off gas to the appliance
2. Extinguish any open flame.
3. If odor continues, keep away from the appliance and immediately call your gas supplier or fire department.

WARNING

Do not store or use gasoline or other flammable vapors and liquids in the vicinity of this or other appliances.

Any LP cylinder not connected for use shall not be stored in the vicinity of this or other appliances.

WARNING

Do not leave unattended during use.
Do not use for cooking.
Follow all gas leak procedures in this manual prior to operation.

WARNING

Improper installation, adjustment, alteration, service or maintenance can cause injury or property damage. Read the installation, operating and maintenance instructions thoroughly before installing or servicing this equipment.

WARNING

If the information in these instructions is not followed exactly, a fire or explosion may result causing property damage, personal injury or death.

FOR YOUR SAFETY

Do not store or use gasoline or other flammable vapors and liquids in the vicinity of this or other appliances.

CALIFORNIA PROPOSITION 65

WARNING

This product is designed to operate with one of the following fuel sources: Liquid Propane or Natural Gas. The fuel used to operate this product, and the products of combustion of such fuel, can expose you to chemicals including Benzene which is known to the State of California to cause cancer, birth defects and other reproductive harm and Carbon Monoxide which is known to the State of California to cause birth defects or other reproductive harm.

(For more information go to: www.p65Warnings.ca.gov.)

TABLE OF CONTENTS

Specifications	4
Carton Contents - Single Fire Feature	5
Preparing a Non Combustible Structure	6
Ventilation; High Elevation; Hard Piping	6
Gas Pipe Sizing Chart	7
Pre-Installation Check List for Single Installation	8
Power Supply Location for Single Installation	9
Burner Pan Preparation	10-11
Installing Valve Kit to Burner Pan	12-13
Installing Key Valve & Remote Control	13-14
Installing Media	15
Wiring Diagram for Single Installation	16
Operating- Lighting Instructions	17
Replacements Parts	18
Replacement Parts List	19
Trouble Shooting	20-22
Optional Accessories	23
Warranty	24

CAUTION

All media (i.e. lava rock, lava stones, lava boulders and fire glass) has the potential of thermal spalling. This is a process that may occur when media is wet and moisture gets trapped inside of the material due to rapid temperature differences. When this happens the media has the potential to crack or "pop" outside the fire feature.

WE HIGHLY RECOMMEND COVERING ALL FIRE FEATURES WHEN NOT IN USE

The use of a cover can lessen the impact of thermal spalling; however, heavy rains, high humidity and the presence of moisture may still cause the media to pop.

ALWAYS USE CAUTION WHEN USING THE FIRE FEATURE

Extra caution should be taken when lighting a fire feature when heavy rains, high humidity and moisture are present. Light the fire feature; leave the area allowing any moisture in the media to dissipate. We strongly recommend that during this drying out time that you monitor the fire feature from a distance. This drying out period should be no less than 30 minutes. Continue monitoring the flame from distance to ensure that all popping has ceased before fully enjoying the fire.

SPECIFICATIONS

Model: Natural Gas (NG)	**A** Depth	**B** Pan/Disc Diameter	**C** Burner Size	**D** Ground Level	**E** Side Wall	**F** Combustible Ceiling	**G** Combustible Floor
FPB-25SFBSAWS-N	1/16”	SQ. 25” OD	22”	18”	36”	96”	18”
FPB-26DBSAWS-N	1/16”	RD. 26” ID	16”	18”	36”	96”	18”
FPB-29DBSAWS-N	1/16”	RD. 29” ID	22”	18”	36”	96”	18”
FPB-29RBSAWS-N	2½”	RD. 29” ID	22”	18”	36”	96”	18”
FPB-30SFBSAWS-N	1/16”	SQ. 30” OD	22”	18”	36”	96”	18”
FPB-33RBSAWS-N	2½”	RD. 33” ID	31”	18”	36”	120”	18”
FPB-34DBSAWS-N	1/16”	RD. 34” ID	31”	18”	36”	120”	18”
FPB-40SFBSAWS-N	1/16”	SQ. 40” OD	36”	18”	36”	120”	18”
FPB-44DBSAWS-N	1/16”	RD. 44” ID	36”	18”	36”	120”	18”

Table 1 Installation specifications

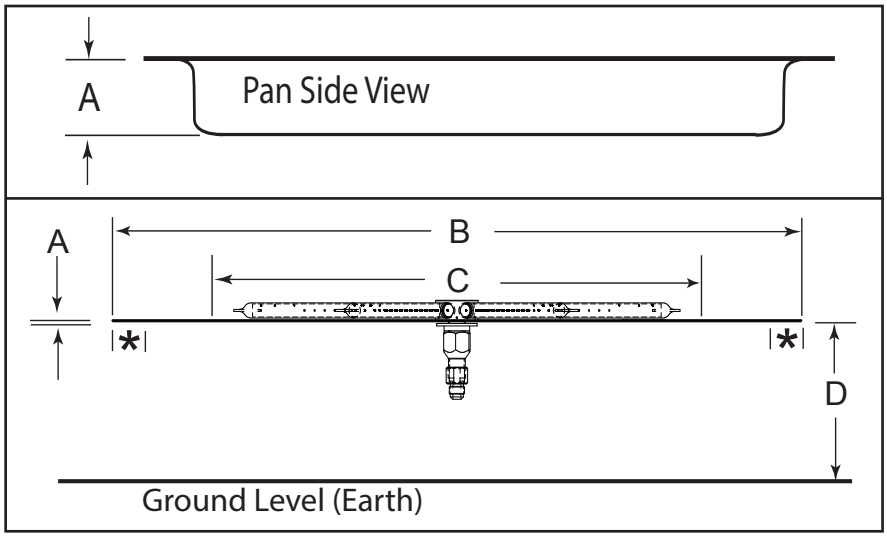

Fig. 1 Shows pan on top view and disc on bottom view.

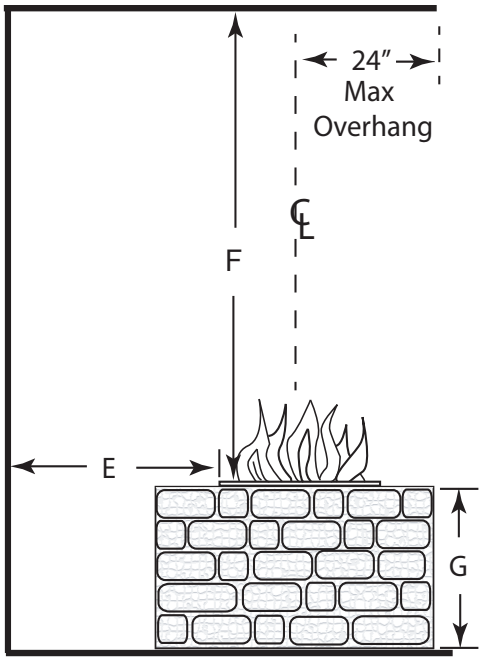

Fig. 2 Clearance to Combustibles
(Not to be used in an enclosed space)

Orifice #	***# Drill Size NG***	***BTU’s NG***	***# Drill Size LP***	***Btu’s LP***
FPB-25SFBSAWS-N	#14	119,000	#30	117,500
FPB-26DBSAWS-N	#29	65 ,000	#41	65,000
FPB-29DBSAWS-N	#14	119,000	#30	117,500
FPB-29RBSAWS-N	#14	119,000	#30	117,500
FPB-30SFBSAWS-N	#14	119,000	#30	117,500
FPB-33RBSAWS-N	#01	171,000	#28	143,000
FPB-34DBSAWS-N	#01	171,000	#28	143,000
FPB-40SFBSAWS-N	25/64	230,000	#22	185,500
FPB-44DBSAWS-N	25/64	230,000	#22	185,500

Table 2 Btu Specifications for Burner Spur by Firegear Outdoors

Disclaimer: Btu listings are based on 7.0”WC for Natural Gas and 11.0”WC for Liquid Propane (LP) at the burner orifice when using Firegear Outdoors Burning Spurs.

Note: Flex line size and proper gas pipe sizing will also affect Btu’s. As a result your Btu’s may vary slightly from Table 2 specifications.

Pressure	**NG**	**LP**
Min. Inlet	3.5” WC (⅛ PSI)	8.0” WC (¼ PSI)
Max. Inlet	14.0” WC (½ PSI)	14.0” WC (½ PSI)
Normal Inlet	7.0” WC (¼ PSI)	11.0” WC (⅜ PSI)

Table 3 Gas Pressures

CONTENTS

Shown below are three different fire pit styles that come with the All Weather Ignition System (AWS); depending upon the model ordered. Each individual “FPB” model fire pit comes with: Burner Pan & Spur Burner, Key Valve, 12-inch Key, Orifice and Flex Line. All shown in the outlined box below.

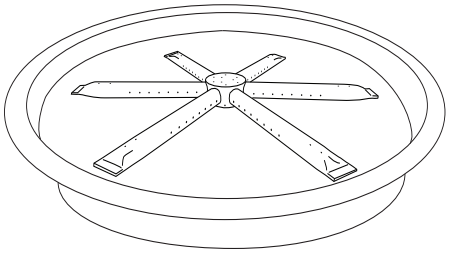

Round Pan Style

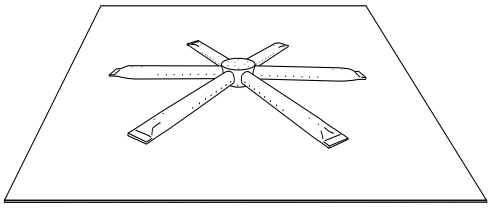

Square Disc Style

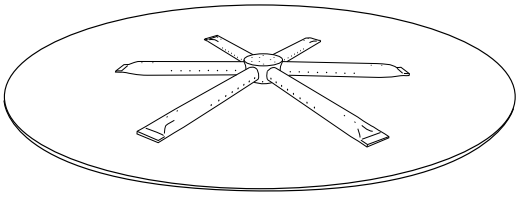

Round Disc Style

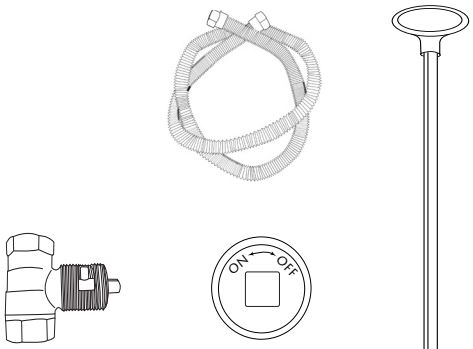

Hardware Bag
(included with fire pit)

These kits includes a valve and control system that is certified by Lab Test for USA and Canada to meet ANSI Z21:.97-2014, CSA C22.2 No 3-M1998 (R2014)
Model: FG-SCGNG-FS30DCV

Each kit comes in a separate box (from the fire pit) and includes all parts shown in the outlined box below.

Kit: FG-AWS30VDC-RCK

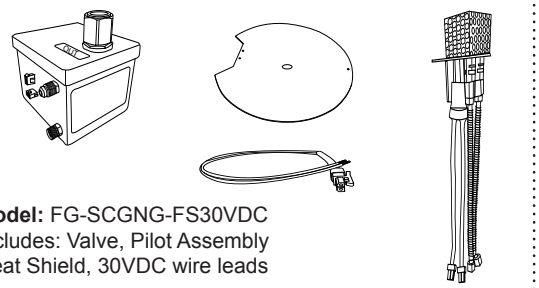

Model: FG-SCGNG-FS30VDC
Includes: Valve, Pilot Assembly
Heat Shield, 30VDC wire leads

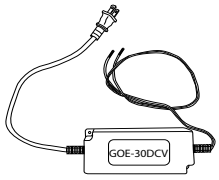

Model: GOE-30DCV power supply for single installs greater than 10’ from pool/spa

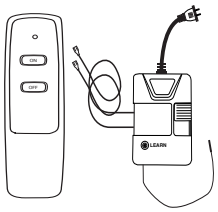

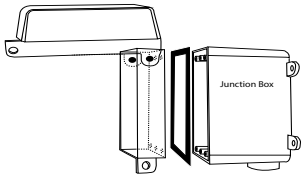

Model: FG-1420-AOD
remote control,
weatherproof box & cover

Includes:
Plate-AWS
(4) 10-24x½” Screws
(1) Brass Nut
(2) 8-18x½” Screws
(4) Wire Nuts
(1) ½”NPT x ½” Flare
(1) Red ext wire

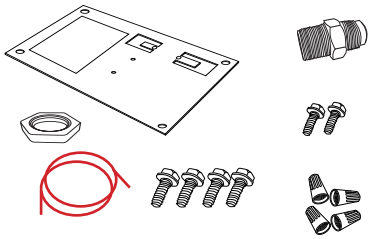

AWS-HARDWARE-BAG

<u>ON/OFF Control Options</u>
Model: FG-TIMER
Model: FG-WS-OD (wall switch)

<u>Additional Safety Precaution Options</u>
Model: FG-EMER (emergency stop)

DESCRIPTION This is a field serviceable (30VDC) commercial grade outdoor electronic system with a maximum gas capacity of 290,000 Btu's. The system features a built-in safety shut-off in case of flame loss and auto-relight. It is shipped as a Natural Gas (NG) model only and must be converted if using Propane (LP) gas. This system must be installed with a burner pan, burner and orifice and installed into an non-combustible enclosure. The "All Weather System" (AWS) requires a 120VAC Ground Fault Interrupter (GFI) to be installed in a weatherproof box. A power supply must be selected for each installation.

In the absence of local codes use the latest edition of the National Fuel Gas Code NFPA54 and National Electrical Code (NEC), or NFPA 70. The weatherproof box (supplied) should be mounted securely within 2-feet or less of the GFI box to install the FG-1420-AOD receiver. The GFI box will provide the 120VAC for the power supply and remote control receiver.

READ THIS MANUAL COMPLETELY BEFORE BEGINNING INSTALLATION. UNDERSTAND HOW THEY OPERATE AND INSTALL.

VENTILATION FOR NON-COMBUSTIBLE ENCLOSURE

Fire features are subjected to many outdoor elements such as rain, snow, wind, heat or cold. **A minimum of 18 square inches (opposite sides) of cross ventilation is required to keep the components in good working order.** Use Fig. 3 on as guide to assist to incorporate proper ventilation.

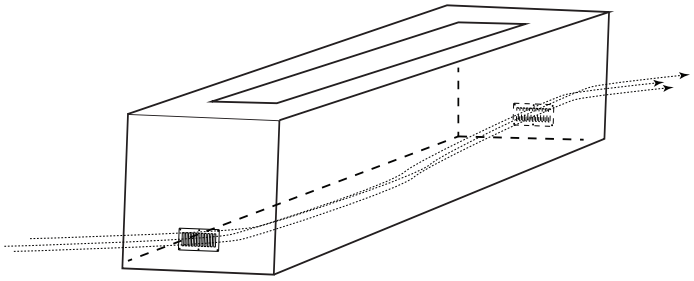

Fig. 3 Shows cross ventilation for a linear enclosure.

LEVEL FLAT SURFACE

Install fire feature on any level, outdoor non-combustible, flat stable surface or a combustible floor according to the clearances specified in this manual for a Firegear burner. **NOTE**: Depending on venting locations, do not place fire pit directly on grass, dirt, or rocks that could prevent proper ventilation. **Ensure proper water drainage is also incorporated into the fire feature enclosure.**

HIGH ELEVATION INSTALLATION

This appliance is listed for elevations from 0- 4500 feet in Canada and the U.S. If elevation exceeds 4500 feet it may be necessary to decrease the input rating by changing the existing burner orifice to a smaller size. Input should be reduced 4% for each 1000 feet beyond the 4500 feet above sea level. Check with your local gas utility for assistance in determining the proper orifice in your location. In some cases the heating value may already be reduced and downsizing the orifice may not be necessary.

HARD PIPING TO FIRE FEATURE WITHOUT GAS PROXIMITY

NOTE: Refer to the NFPA54 (National Fuel Gas Code) for proper pipe sizing. See gas line sizing chart on page 7 as a reference.

1. Turn **OFF** gas supply system. **NOTE**: All gas connections (except for brass to brass) require the following. Clean pipe threads using either a wire brush or steel wool. Apply pipe sealant to the fittings before making any connection.
2. Ensure all gas connections are snug, but do not over tighten! **BE CAREFUL!**
3. Install necessary pipe for the distance required and a manual shut-off valve at the exterior house wall. Check with local codes for proper procedures. If pipe is to pass through a foundation or house wall, make sure to seal the area around the pipe with weather sealant. Consult a plumber for proper installation to ensure you are providing adequate gas supply for your application.
4. The primary gas shut-off (not supplied) will require a ½" male flared fitting to enable connection of the stainless steel flex gas line (not supplied) with the fire feature (see Fig. 5 page 9).
5. Do not place an LP tank inside any fire pit enclosure. Locate all Liquid Propane (LP) tanks outside the enclosure.
6. To prevent performance problems with LP gas fire pits, do not use a LP tank less than 100lbs. capacity.

IMPORTANT
Installation of Natural or LP gas should be done by a qualified installer, service agency or gas supplier. This appliance must be isolated from the gas supply piping system by closing its manual shutoff valve during any pressure testing of the gas supply piping system at test pressures equal to or less than ½" psi (3.5kPa)

GAS PIPE SIZING CHART

NATURAL GAS : PIPE SIZING CHART

Length of Pipe in Feet	1/2"	3/4"	1"	1 - 1/4"	1 - 1/2"	2"	2 - 2 1/2"	3"	4"
10	108	230	387	793	1237	2259	3640	6434	-
20	75	160	280	569	877	1610	2613	5236	9521
30	61	129	224	471	719	1335	2165	4107	7859
40	52	110	196	401	635	1143	1867	3258	6795
50	46	98	177	364	560	1041	1680	2936	6142
60	42	89	159	336	513	957	1559	2684	5647
70	38	82	149	317	476	896	1447	2492	5250
80	36	76	140	239	443	840	1353	2315	4900
90	33	71	133	275	420	793	1288	2203	4667
100	32	68	126	266	411	775	1246	2128	4518
125	28	60	117	243	369	700	1143	1904	4065
150	25	54	105	215	327	625	1008	1689	3645
175	23	50	93	196	303	583	993	1554	3370
200	22	47	84	182	280	541	877	1437	3160
300	17	37	70	145	224	439	686	1139	2539

- Natural Gas (NG) flow is given in thousands of BTU/hr. = 1 cubic foot of NG gas - 1000 BTU
- Nominal pressure at the burner for Natural Gas is 3.5" of water column. (Typical machine supply 5"-7")
- Pipe length must include additional length for all fittings. Add approximately 5 feet of pipe per fitting.
- Natural Gas Example: A machine with a burner that requires 440,000 BTU would need a 1 -1/4" pipe for a 20" long run.

LIQUID PROPANE : PIPE SIZING CHART

Length of Pipe in Feet	1/2"	3/4"	1"	1 - 1/4"	1 - 1/2"	2"	2 - 2 1/2"	3"	4"
10	275	567	1071	2205	3307	6221	10140	17990	35710
20	189	393	732	1496	2299	4331	7046	12510	25520
30	152	315	590	1212	1858	3465	5695	10110	20620
40	129	267	504	1039	1559	2992	4778	8481	17300
50	114	237	448	913	1417	2646	4343	7708	15730
60	103	217	409	834	1275	2394	3908	6936	14150
70	89	185	346	724	1086	2047	3329	5908	12050
80	78	162	307	630	976	1811	2991	5309	10830
90	69	146	275	567	866	1606	2654	4711	9613
100	63	132	252	511	787	1496	2412	4281	8736
125	54	112	209	439	665	1282	2083	3618	7382
150	48	100	185	390	590	1138	1808	3210	6549
175	43	90	168	353	534	1030	1637	2905	5927
200	40	83	155	325	491	947	1505	2671	5450
300	37	77	144	303	458	887	1404	2492	5084

- Liquid Propane (LP) Gas flow is given in thousands of BTU/hr. = 1 cubic foot of LP gas - 2500 BTU.
- This chart refers to low pressure LP, after regulation, Standard nominal pressure at the burner for Liquid Propane Gas is 11" of water column.
- Pipe length must include additional length for all fittings. Add approximately 5 feet of pipe per fitting.
- LP Example: A machine with a burner that requires 440,000 BTU would need a 1" pipe for a 20' long run.

NOTE: The sizing charts above list the specific pipe sizes required for the amount of BTU's for a new gas line installations. If you are using an existing gas line you must take into consideration the existing gas line capacities to ensure you will have proper pressure. This chart is for reference only, we recommend you consult with a Licensed Plumber/Gas Fitter or NFPA54 (National Fuel Gas Code - current edition) for more details.

Table 4 Gas Pipe Sizing Chart

PRE-INSTALLATON CHECK LIST FOR SINGLE INSTALL

GAS INFORMATION

Gas Volume - Ensure the correct size pipe is used for the total gas load. If installing more than one fire feature, ensure the correct size pipe is based upon the distance of the furthest fire feature away and the total gas load is for all gas appliances on that gas line (i.e. fire feature, BBQ, torches, etc.).

Gas Pressure & Type of Gas - What is the gas pressure being supplied to the fire features? Is the fire feature(s) configured for the proper gas type? The AWS gas valve is shipped for Natural gas. To convert to Propane (LP) gas, the secondary pilot orifice must be changed.

Manual Shut-off/Key Valve - The manual key valve (supplied) should be installed within 6-feet of the fire feature. Verify proper distance with local and national codes.

Purging a New Gas Line - Has the gas line been purged of both air and possible debris? Any gas lines buried underground must be pressure tested up to 60PSI to ensure no leaks. After inspection is complete, most plumbers will release pressure in the line at one location by opening the manual ball/key valve. It is recommended to release pressure by opening a ball/key valves associated with all the fire features. ***Example***: There are four fire features on a job, open the first key valve for a few seconds, then close it. Then move on to the next key valve and do the same thing until you have purged the debris out of all four gas lines.

Main Burner Orifice - All fire features **MUST** have a main burner orifice installed on the inlet side of the burner. An orifice limits the amount of gas flow to the burner to ensure the flame is a safe and reasonable height to not pose a risk to people or property. The drawings below show the difference between a Natural gas and Propane (LP) orifice. Because LP gas does not burn as clean as Natural and requires ventilation holes at the base of the orifice to provide a cleaner flame. See Fig. 4.

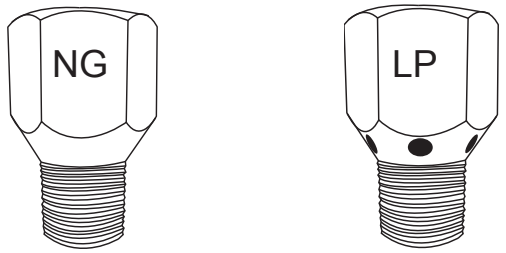

Fig. 4 Natural (NG) orifiice on left; LP (vent holes) on right.

ELECTRICAL INFORMATION

Wire Gauge - Is the wire gauge correct? Wiring must be 12AWG or greater (solid or stranded) for all installations.
Note: It is recommended to fill the wire nuts with either dielectric grease or silicone prior to installing the wire nut. This will ensure a waterproof connection.
Why GFI circuit? A GFI is a type of circuit breaker which shuts off electric power when it senses an imbalance between the outgoing and incoming current. It protects the house wires and receptacles from overheating and possible fire.

Power Supply - Firegear Outdoors offers one power supply for use with the FPB fire features. The power supply requires 120VAC power to operate and converts it to 30VDC to operate the gas valve. **DO NOT CONNECT 120VAC DIRECTLY TO THE GAS VALVE WIRES - DAMAGE WILL OCCUR.** The GOE-30VDC is used for one fire feature only - installed 10-feet or greater from a pool or spa. This power supply has a 3-foot power cord to plug into 120VAC outlet and a 3-foot leads to connect to the gas valve on the 30VDC side.

MEDIA INFORMATION

Acceptable media placed over top of the burner:

Lava Rock 1”- 2” size
FG-LAVA-10 (10 LB)
FG-LAVA-50 (50 LB)

GL Glass ½” - ¾” size
Various colors are available
See Product catalog for details
Sold in 5 LB bags or 8 bags to a case

GRL Reflective Glass ½” - ¾” size
Various colors are available
See Product catalog for details
Sold in 5 LB bags or 8 bags to a case

DRAINAGE INFORMATION

For any fire feature ABOVE ground level requires a drain line or a way for water to exit the fire feature.

NOTE: THIS AWS SYSTEM IS NOT APPROVED TO BE INSTALLED BELOW GROUND LEVEL.

POWER SUPPLY LOCATION

The GOE-30VDC power supply is to be installed inside the enclosure due to the wire length limitations. The power cord is 3-feet long the 30VDC leads to the valve are 3-feet long. See Fig. 5.

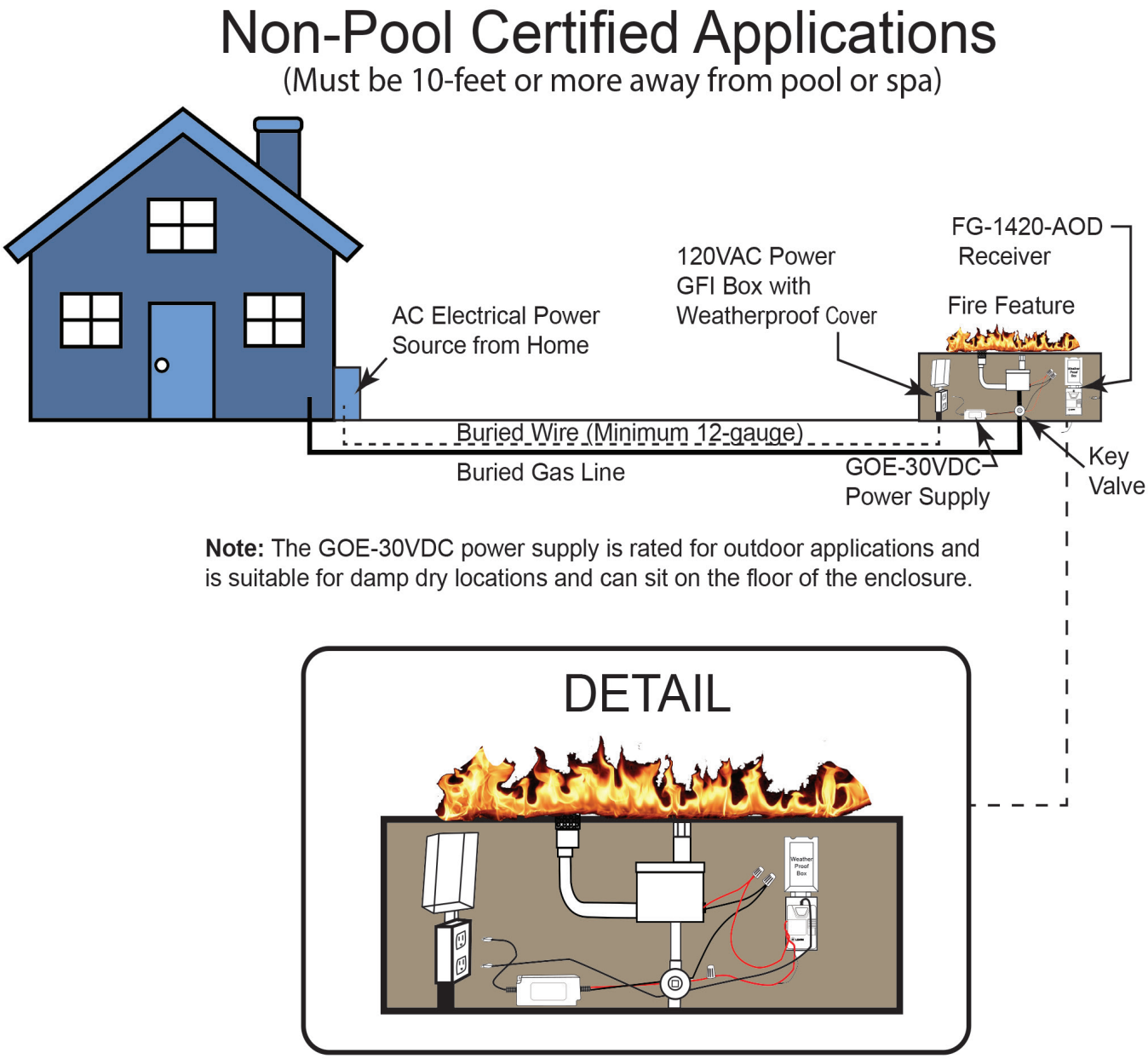

Fig. 5 Example of a single fire feature install with power supply and remote control contained within the enclosure, when applicable. **Note**: Must be 10-feet or more from a pool/spa.

PREPARING THE BURNER PAN FOR PILOT INSTALLATION

ALL PANS OR DISCS MUST BE REMOVABLE FOR SERVICE

Pans or discs CAN NOT be installed in a manner to prevent them from being removed for service.

Top coping material or top cap of fire feature MUST NOT overlap onto the pan or disc surface. Pan lip or disc outer edge must be be unobstructed so it can be lifted out of the enclosure for servicing.

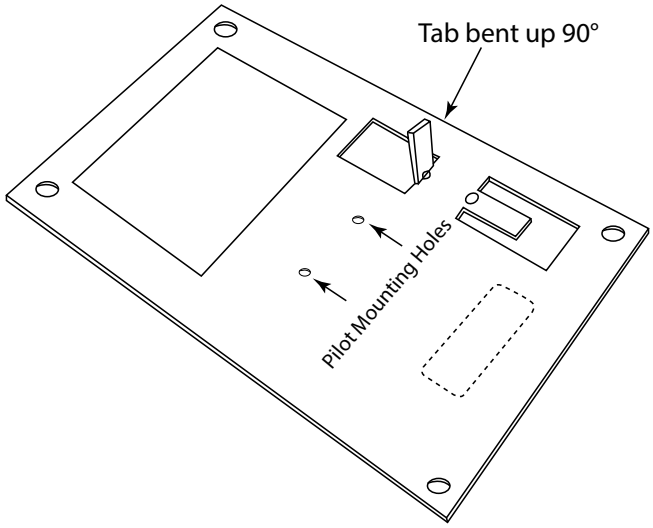

Fig. 7 Show one tab bent upward 90°.

Preparing the AWS-PLATE

In the parts box is an #AWS-PLATE. The plate has two tabs and a large square hole. Orient the plate as shown in Fig. 6. Uses a pair of needle nose pliers and bend the tab closest to the square hole up 90°. See Fig. 7. Leave the other tab as is, in the flat position.

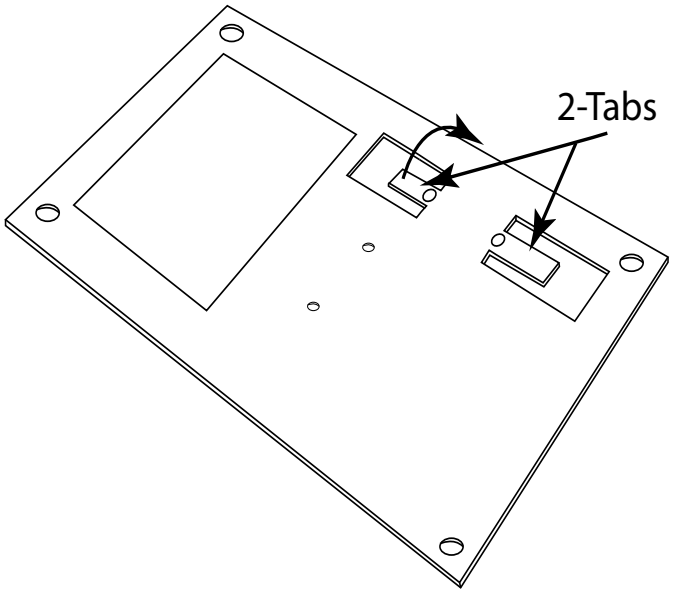

Fig. 6 Shows AWS-PLATE in flat position.

Removing the four screws from the existing cover plate from the fire pit pan. **Note:** Retain the four screws to install the new AWS ignition assembly later in this process.

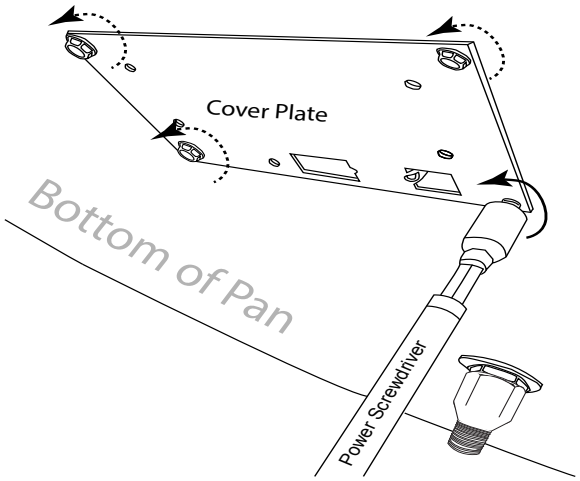

Fig. 8 Removing cover plate.

INSTALLING PILOT ASSEMBLY INTO AWS PLATE

Gather the pilot assembly ends and install them into the square hole of the AWS plate as shown in Fig 9.

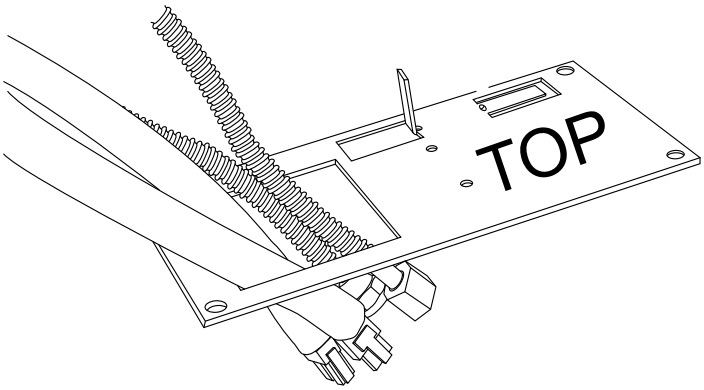

Fig. 9 Installing Pilot assembly into mounting plate

Align the pilot assembly plate to the mating holes of the AWS-PLATE and secure pilot assembly to the plate with two #8-18 x 1/2" hex screws (provided). See Fig. 10.

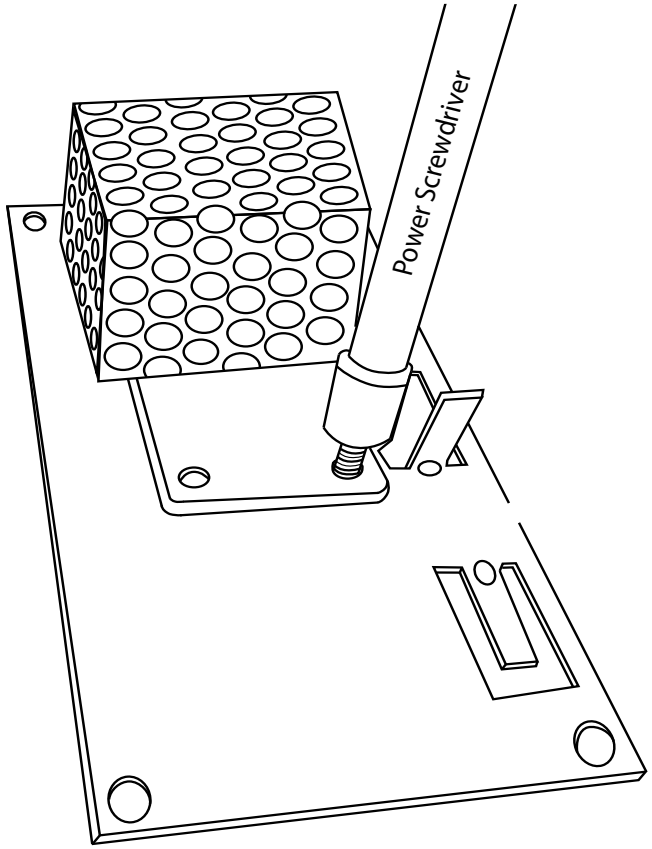

Fig. 10 Securing pilot assembly with two screws

After mounting the pilot assembly to the plate install it into the bottom of the fire pit pan as shown in Fig. 11.

Use the four hex head self tapping screws with the kit and install the mounting plate with the new pilot assembly from the bottom of the burner pan. See Fig. 11.

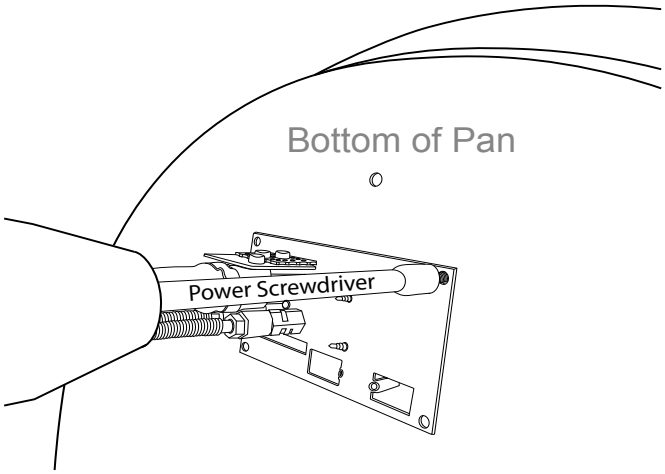

Fig. 11 Installing the mounting plate and pilot assembly to bottom of burner pan.

INSTALLING BURNER INTO BURNER PAN

Reinstall the burner into the pan or disc per Fig. 12. Ensure the burner leg is against the tab of the AWS-PLATE as previously prepared. Secure the burner against the pan with a nut and washer then install the orifice and shown in Fig. 12. Firegear Spur burner and orifice shown.
Note: The AWS valve is set up for ½" fittings. If your burner is ¾" you will need to provide a reducer to adapt to the gas valve.

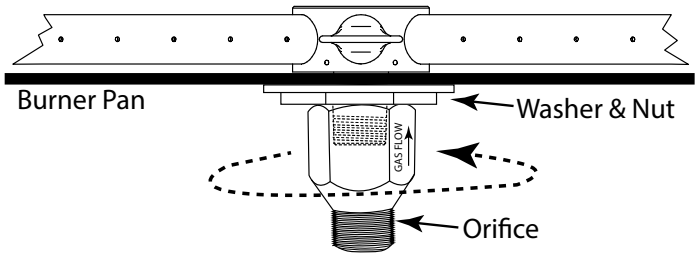

Fig. 12 Installing orifice to burner nipple.

CAUTION: Gas rated Teflon tape or pipe compound must be used on a NPT connections.

Propane (LP) installations require a 3" nipple installed into the burner before the LP orifice is installed. The helps prevent any back pressure of flames trying to exit through the vent holes.

INSTALLING GAS VALVE TO BURNER

Invert the burner pan upside down and install the heat shield (Fig. 13). The heat shield will rest on the orifice. Place the cutout or notched section of the heat shield toward the pilot area in the burner pan. This allows for pilot tubing clearance on smaller pans. Install the brass nut (suppled with kit) on the OAS to secure the heat shield into place. Secure nut with an adjustable wrench.

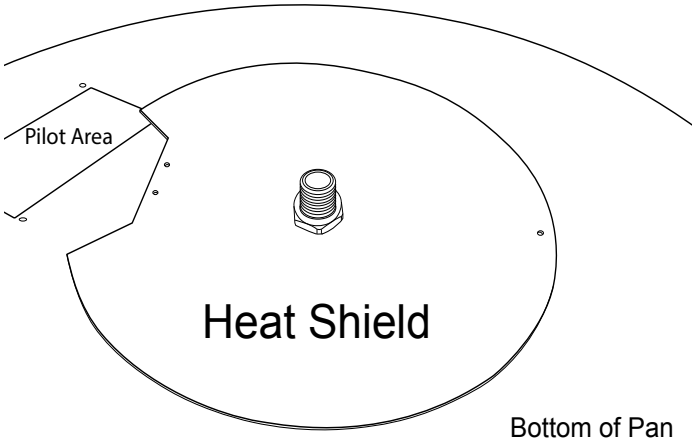

Fig. 13 Installing heat shield

Remove the plastic plug from the outlet side of the gas valve box and thread the female outlet to the male nipple of the OAS previously installed on the burner pan as shown in Fig. 14. Ensure the brass nipples and 4-PIN connector on the gas valve box are located toward the pilot area when securing gas valve into place.

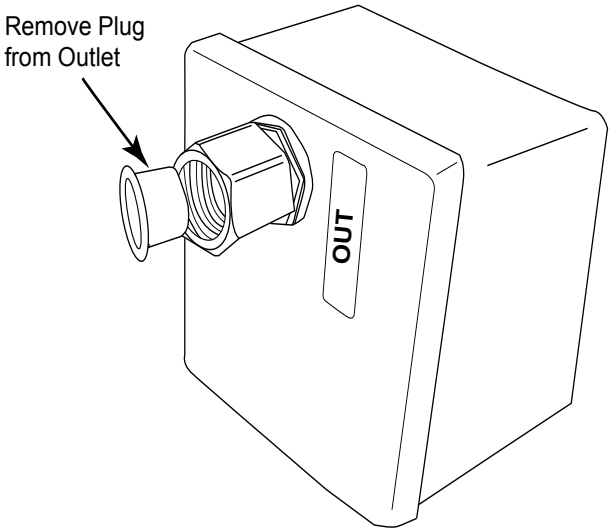

Fig. 14 Removing the plug from the Outlet end of the valve

Thread the Outlet side of the gas valve to the orifice and secure it into position. Ensure the brass pilot fittings are facing the pilot area for a convenient connection.

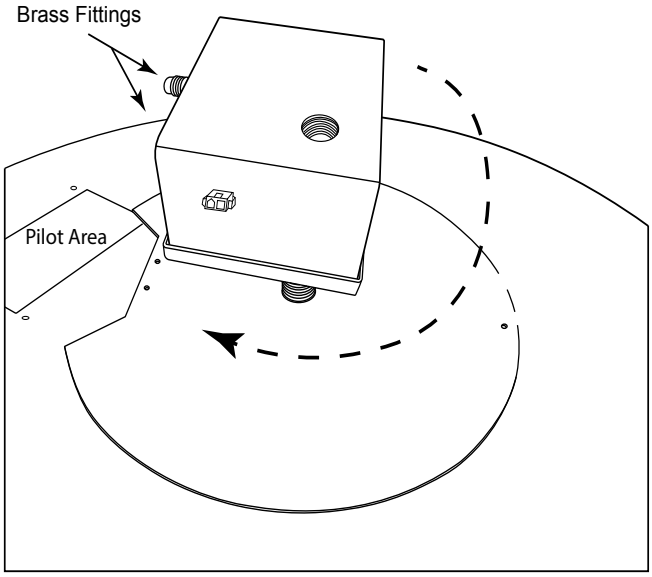

Fig. 15 Installing gas valve to orifice.

Install a 1/2” flare x 1/2” MIP fitting (U1-8D-S included) onto the inlet side of the gas valve box. Wrap the male NPT threads with gas rated Teflon tape or pipe compound before securing into position. See Fig. 16. This will enable a non-whistling flex line to be connected directly to the gas valve.

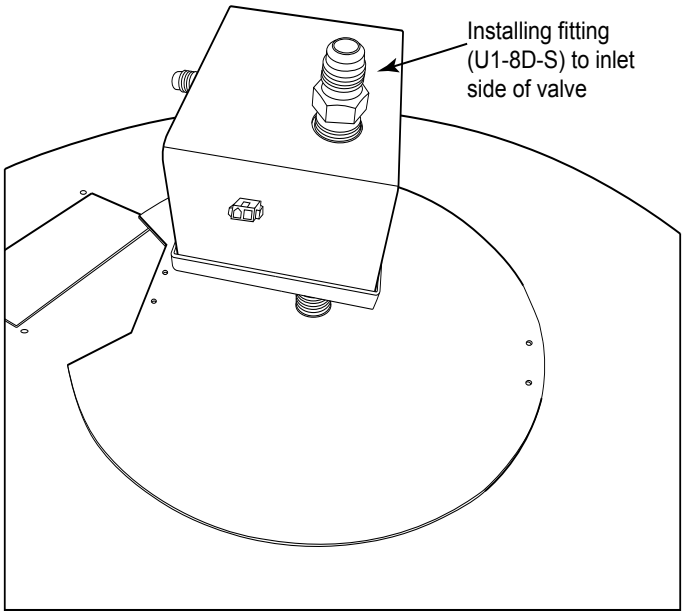

Fig. 16 Installing fitting into the inlet side of gas valve

The pilot assembly has two pilots inside the perforated hood. One uses a flared fitting to connect to the valve box an the other pilot uses a compression fitting. Secure both fittings to the valve box using a $^{9}/_{16}$" open-end wrench for the flared fitting and a ½" open end for the compression fittings. See Fig. 17.

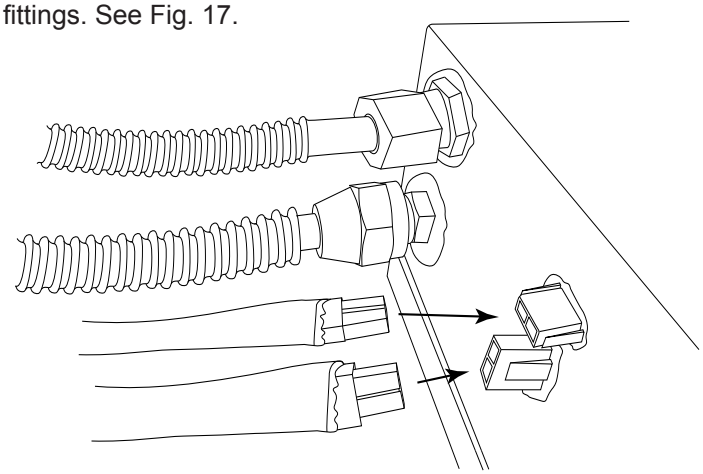

Fig. 17 Connecting pilot assembly to valve box.

Install the 2-PIN connectors (items #1 & #2 in Fig. 18) from the pilot assembly into the valve box, located next to the pilot assembly fittings. Ensure the connector locks into position. See Fig. 17. **Note:** Connectors are two different types to prevent incorrect connection.

Plug the red and black power supply wire, item #3, in Fig. 18 into the 2-PIN connector on the side of the valve box. Note the red sleeve on the positive wire when attaching the power supply.

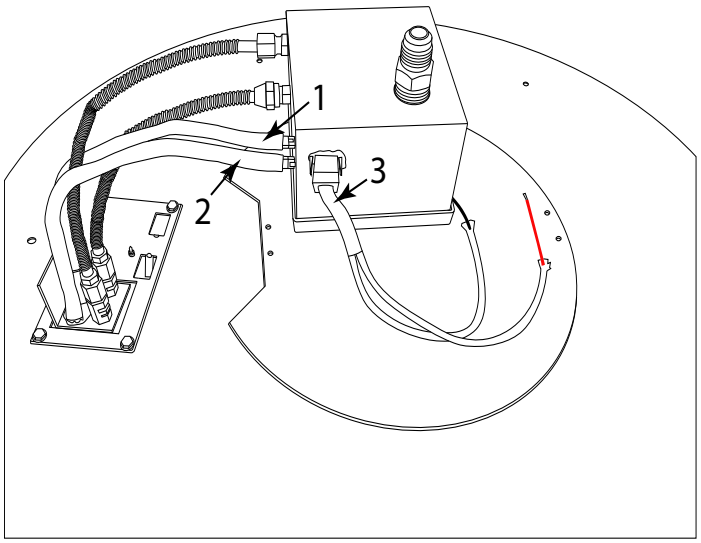

Fig. 18 Shows three 2-PIN connectors installed into valve box and the power supply wires attached to valve box.

INSTALLING MANUAL KEY VALVE

The key valve contents: (1) key valve, (1) 12-inch key and (1) flange. See Fig. 19. The valve requires a 1¼" round clearance hole in the non-combustible enclosure wall. See the instructions supplied with the key valve for more specific details. **Note:** Be sure to leak test all fittings before operating.

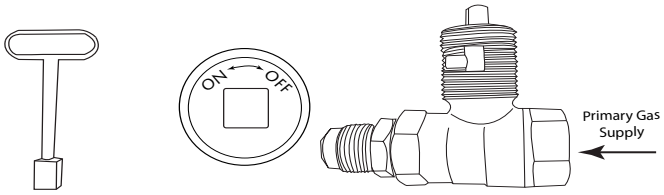

Fig. 19 Key valve components

Depending on the enclosure being used, the key valve can be installed in various methods. The flange threads onto the valve as shown and comes with one fitting to attach the flex gas line that is supplied with the fire pit. The primary gas line fitting (not supplied) is left up to the plumber to supply depending on the connection needed for the installation See Fig. 20.

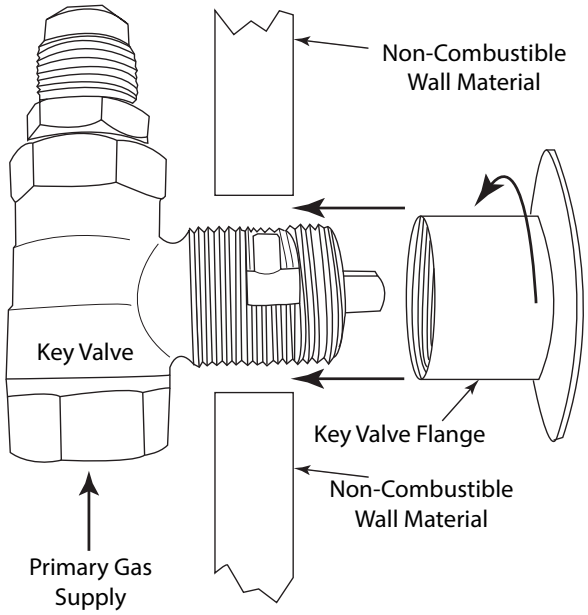

Fig. 20 Key valve components

Note: A 1¼" x 2" black iron or galvanized coupler/nipple (not supplied) can be used as a spacer between the manual valve and the valve flange to add additional support to hold the manual key valve in place, if needed. See Fig. 21.

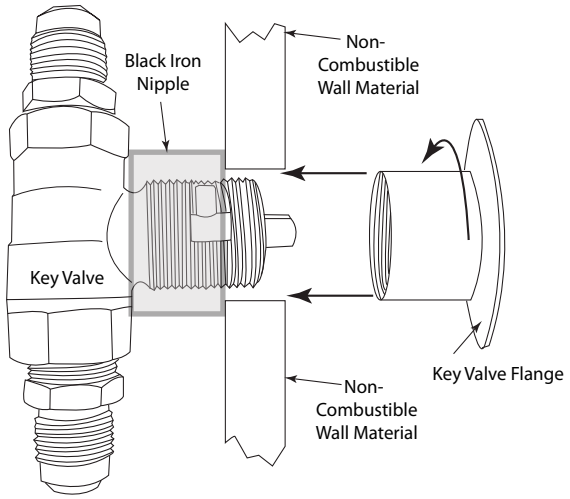

Fig. 21 Key valve using nipple as additional support

INSTALLING POWER SUPPLY & REMOTE CONTROL

Install the GOE-30DCV power supply and FG-1420-AOD remote control as shown in the wiring diagram Fig 24, page 16. **Note**: Ensure the external antenna on the FG-1420-AOD receiver is outside the junction box.

This is a polarity sensitive system. There is a red sleeve attached to the positive (+) side of the DC power supply.

When wiring the remote control receiver, cut off both 1/4" terminals and strip both wire ends. Connect one red wire from the receiver to the GOE-30DCV power supply with the red sleeve; secure with wire nut. Connect the other red wire from the receiver to the + (positive) directly to the red wire from the gas valve control box; secure with wire nut.

Note: An extra red jumper wire is provided to extend either one of the red wires of the FG-1420-AOD remote control receiver (if needed). It is not required to use this wire. It depends on each application.

DO NOT CONNECT 120VAC DIRECTLY TO THE GAS VALVE WIRES -DAMAGE WILL OCCUR. THIS IS NOT COVERED BY WARRANTY.

Note: Use dielectric grease inside of all wire nut connections to protect from the outside environment.

Plug the GOE-30VDC power supply and remote receiver into the 120VAC GFI box. Install battery into the transmitter of the FG-1420-AOD and "learn" (program) the receiver to the transmitter. Ensure the slide switch on the receiver is in the REMOTE position See Fig. 22; Press and Release the "learn" button on the receiver. You will hear the receiver emit a short "beep". Once this occurs, press any button on the transmitter and the receiver will emit several rapid beeps confirming the two are programed together.

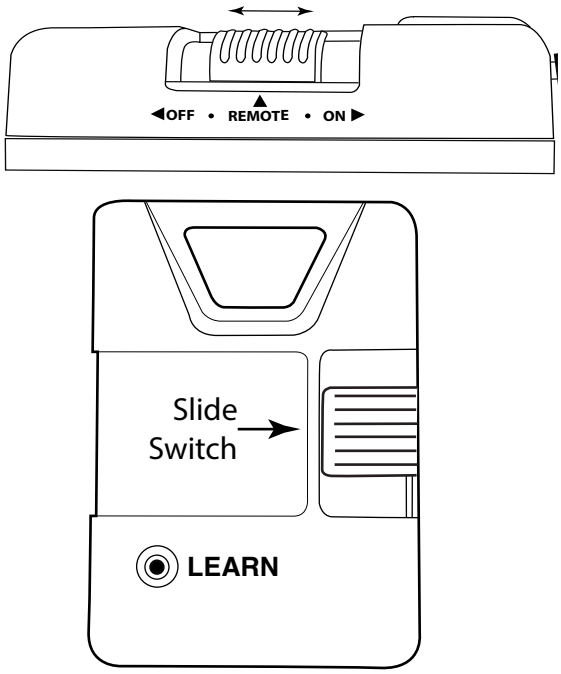

Fig. 22 FG-1420-AOD slide switch and learn button.

INSTALLATION OF MEDIA INTO BURNER PAN

Install lava rock into the burner pan. Ensure the lava rock is a minimum of 1-inch diameter for proper operation.
Note: Do not pour Lava Rock directly from bag. It should be placed naturally and NOT packed in tight. Loose fitting is important to ensure robust flames. Placing the lava rock in the pan by hand, ensures no excessive dust from bag lays in the bottom of pan and potentially plugs the burner port holes or the pan weep holes.

IMPORTANT: **DO NOT PLACE ROCK OVER TOP OR UNDER THE PILOT SCREEN COVER.** The screen must be free of any debris to ensure proper lighting of burner and good flame sense (See Fig. 23).

Cover the burner completely with media but do not make the depth greater than 1-inch over-top of the burner port holes.

Do NOT cover the top of mesh pilot hood with any rock or glass. It must be free an any debris to operate properly.

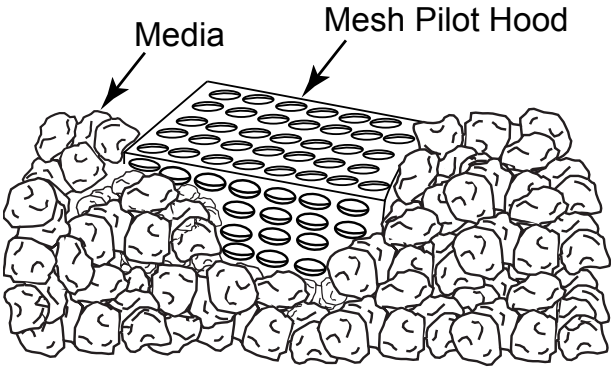

Fig. 23 Media placement around pilot hood.

Acceptable media placed over top of the burner:

Lava Rock Min.1”- 2” size
FG-LAVA-10 (10 LB)
FG-LAVA-50 (50 LB)

GL Glass Min. ½” - ¾” size
Various colors are available
See Product catalog for details
Sold in 5 LB bags or 8 bags to a case

GRL Reflective Glass
Min. ½” - ¾” size
Various colors are available
See Product catalog for details
Sold in 5 LB bags or 8 bags to a case

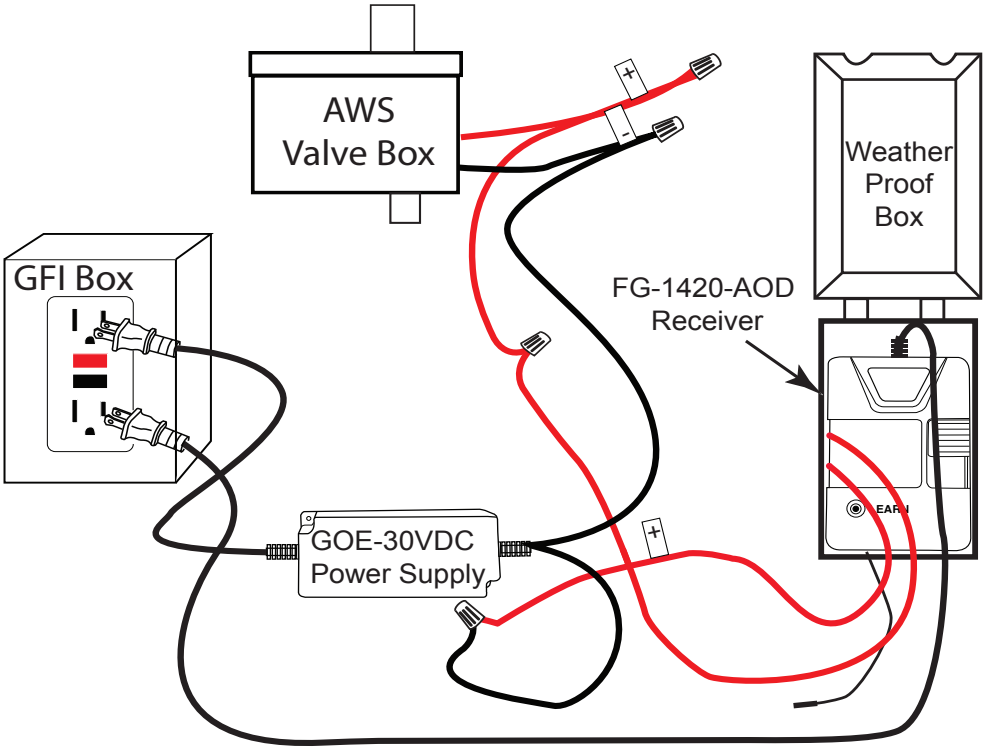

Fig. 24 Wire diagram of AWS system with FG-1420-A OD remote control receiver

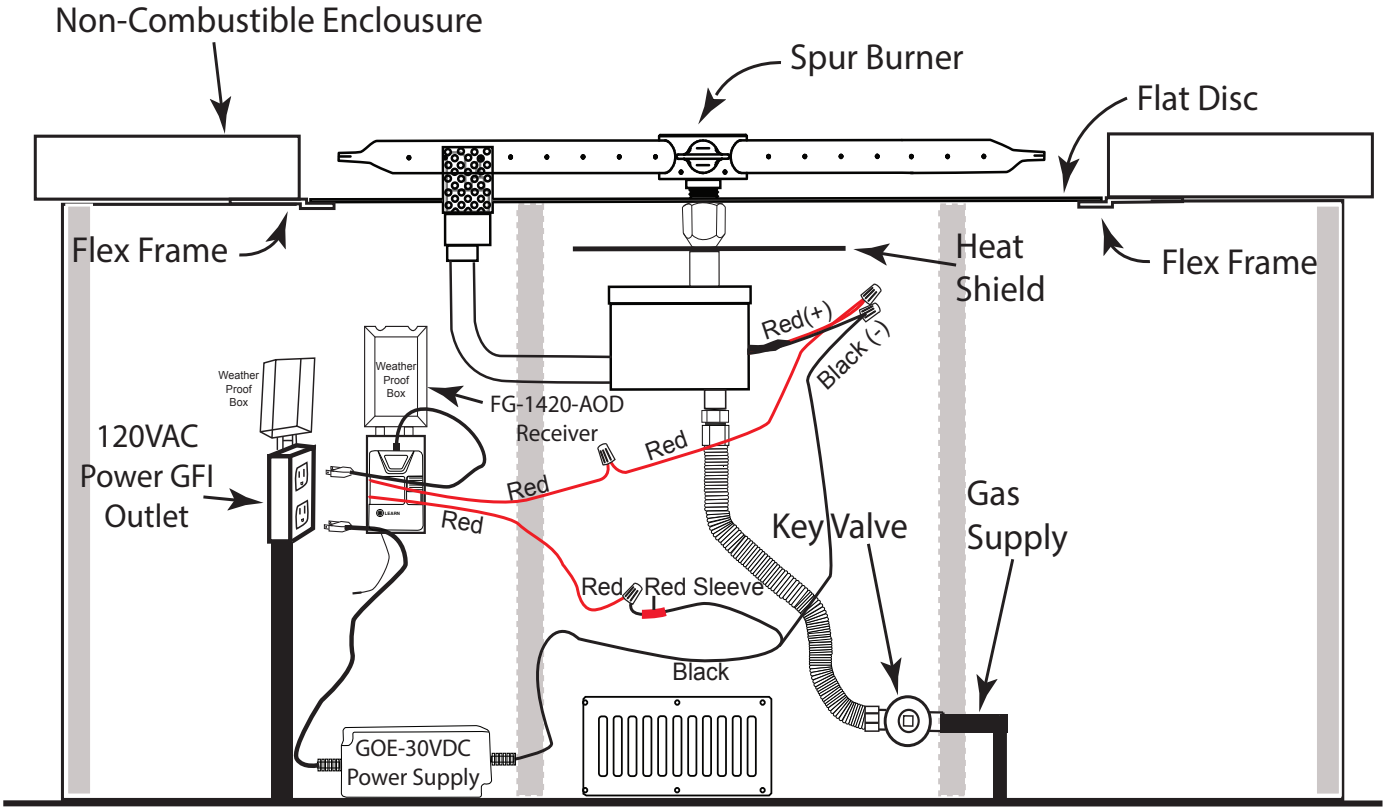

Fig. 25 Shows typical installation of fire pit using AWS system

OPERATION & LIGHTING

CAUTION: Children and adults should be alerted to the hazards on high surface temperatures and should stay away to avoid burns or clothing ignition. Young children should be carefully supervised when they are in the area of the appliance.

WARNING: Do not use this appliance if any part has been under water. Immediately call a qualified service technician to inspect the appliance and to replace any part of control system and any gas control, which has been under water.

SAFETY WARNINGS

1. Never leave the fire pit unattended during operation.
2. Clothing or other flammable materials should not be placed on or near the appliance.
3. Any guard or other protective device removed for servicing the appliance must be replaced prior to operating the appliance.
4. Installation and repair should be done by a qualified service person. The appliance should be inspected before use and at least annually by a qualified service person. More frequent cleaning may be required as necessary. It is imperative the control compartment, burners and circulating air passageways of the appliance be kept clean.
5. Inspect the fuel supply connection before each use of the appliance.
6. Temporary storage of this appliance indoors is permissible only if it has been disconnected from its fuel supply (Natural or LP gas line).

WARNING

1. This appliance is hot when operated and can cause severe burns if contacted.
2. Do not burn any solid fuels in this appliance.

READ ALL LIGHTING INSTRUCTIONS BEFORE ATTEMPTING TO LIGHT FIRE PIT

CAUTION: ENSURE YOU HAVE LEAK TESTED THE FIRE PIT BEFORE OPERATING AND THE TRANSMITTER AND RECEIVER HAVE BEEN "LEARNED"(PROGRAMED TOGETHER) FOR WIRELESS OPERATION.

WARNING: Do not stand over fire pit during ignition or operation due to high surface temperatures.

LIGHTING INSTRUCTIONS

TURNING ON FIRE PIT/FEATURE

Prior to turning the fire pit ON, visually inspect the fire pit to ensure debris such as leaves or other combustible materials have not collected on top of the fire pit, which could burn and emit embers once the fire pit is turned ON. At the same time, ensure anyone standing close to the fire pit is aware you are turning it ON and steps away, at a safe distance prior to lighting.

The ignition sequence is as follows:

1. Turn the manual key valve to the ON position.
2. Turn the fire pit ON by pressing the ON button of the remote control. The hot surface igniter will heat up and begin to "glow" in approximately 10 seconds.
3. Once the hot surface igniter heats up, the pilot gas valve opens, a "click" is heard, and gas is released to the burner, lighting the fire pit.

The entire ignition sequence ignites within 20 seconds or less. If not, press the OFF button on the remote control and wait 5 minutes before trying again.

TURNING OFF FIRE PIT/FEATURE

1. Turn the fire feature OFF by pressing the OFF button on the remote control (or switch/timer if applicable).
2. If you are no longer burning the fire pit until another time, we recommend turning the key valve to OFF position.

AWS REPLACEMENT PARTS

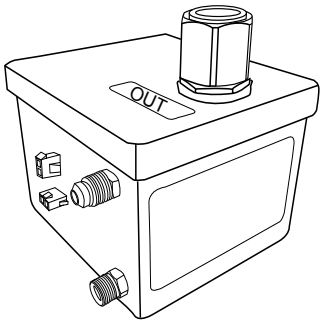

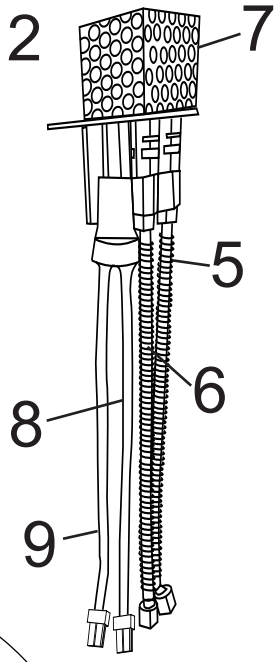

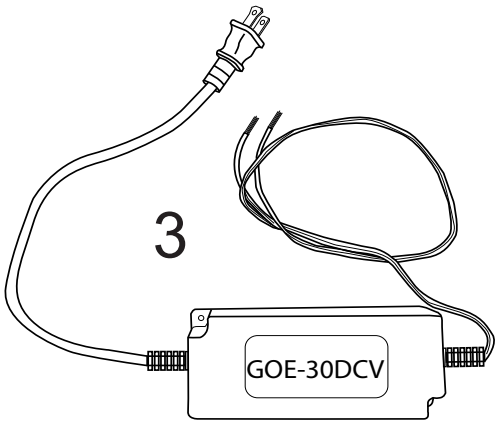

4

Items are not to scale

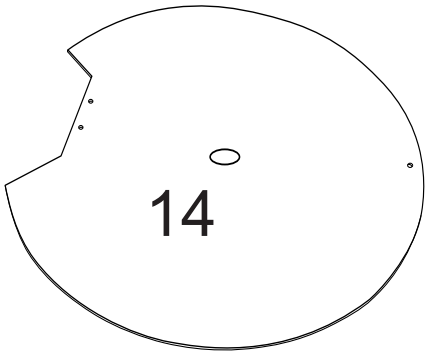

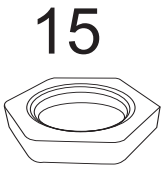

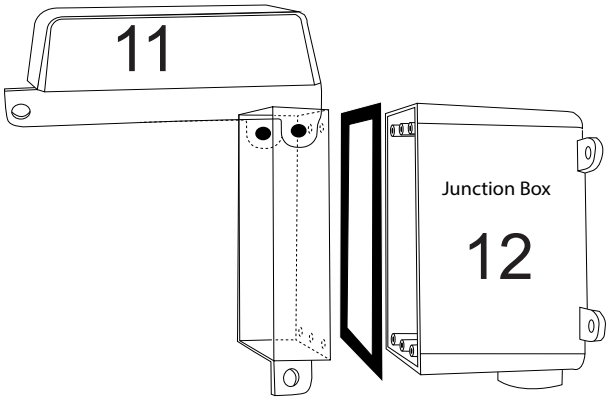

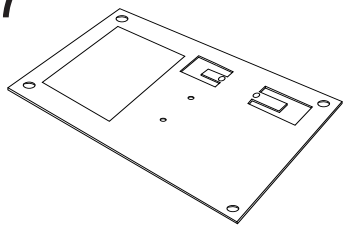

AWS REPLACEMENT PARTS LIST

Item	Description	Qty.	Part Number
1	Ignition Control Box (Valve box only)	1	FG-ICB
2	Pilot Burner Assembly (Complete pilot assembly and wires)	1	FG-PBA
3	30VDC Power Supply for single fire feature (10-feet from pools)	1	GOE-30DCV
5	Primary Pilot Burner Gas Line (24-inch)	1	FG-PPBG
6	Secondary Pilot Burner Gas line (24-inch)	1	FG-SPBG
7	Pilot Burner Cage (hood)	1	FG-PBC
8	Thermopile - for primary pilot assembly	1	FG-TP
9	Hot Surface Ignition - for pilot burner assembly (item #2)	1	FG-HSI
10	Propane (LP) Pilot Burner Orifice - for LP applications (not shown)	1	FG-PBO-LP
11	Weatherproof Junction Box (used with 1420-AOD)	1	WP-JBOX
12	Weatherproof Cover - used with 1420-AOD (not shown)	1	WP-COVER
13	Wire Nuts - Used to secure 30VDC power from valve box	2	WIRENUT-ORG
14	Heat Shield	1	FG-HEATSHIELD
15	½" NPS Bass Nut (secures heat shield)	1	105-8
16	30-Volt Power Wires for Gas Valve (12-inch)	1	FG-POWERWIRES
17	Pilot Assembly Mounting Plate	1	PLATE-AWS
18	Hand Held Remote Control and Receiver	1	1420-A
19	10-24 x ½" SS Thread Cutting Screw (not shown)	4	ST3-113-1028
20	8-18 x ½" Hex Head Self Tapping Stainless Screw (not shown)	2	31802
21	½" Flare x to ½" MIP (no shown)	1	U1-8D-S

Valve Box Reference

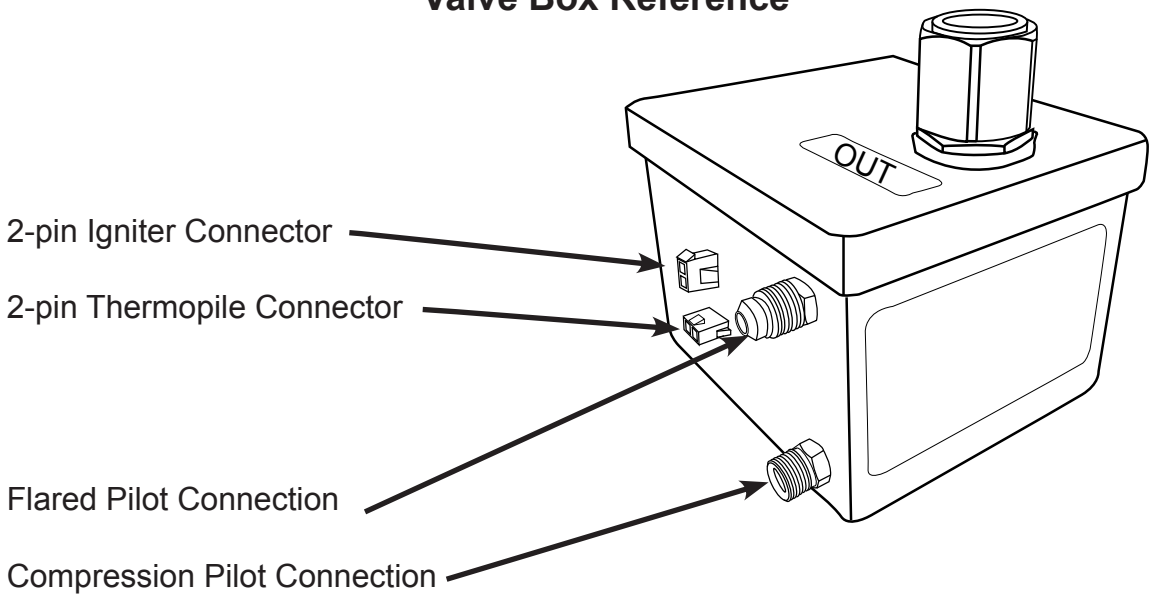

Sequence of Operation

Fire Feature Turned ON

↓

First Pilot with Hot Surface Igniter Heats Up and Glows (Approx. 10 seconds)

↓

Secondary Pilot Opens; "Click" is Heard; Gas is Released to Burner

↓

Fire Feature is Lit Until Turned OFF

The system is designed to relight itself if blown out. It will try (3) times to relight before it goes into a "hard" lock out. Then it must be turned OFF and back ON to reset it .

START UP ISSUES

1. Turned the Fire Feature ON... but nothing happens.

- **No Power** - Check for power at the fire feature(s). Confirm proper power is being supplied to the system. 30VDC from power supply to valve and 120VAC where power supply is plugged into.
- **Defective Controller** - If for some reason someone connected 120VAC power directly to the gas valve, the controller inside the valve box will be damaged. It this happens, a burned electrical smell might be present.

2. Glow Plug does not glow.

- **Connector Not Plugged In Correctly** - Check the 2-Pin connector from pilot to the gas valve, Ensure it is plugged into place with the locking latch.
- **Pins Not Secure** - Check the pins inside the 2-pin connector, ensure they are not loose. If loose push them back in until tight and try system again.
- **Possible Defective Igniter** - Unplug the igniter and check resistance across the two pins inside the plastic housing coming from the pilot assembly. Use a multi-meter to check resistance. No resistance or resistance greater than 8 ohms indicates a defective igniter. Page 27 valve reference shows the igniter and thermopile 2-pin connections for testing.

3. Glow Plug Glows, But Does Not Ignite the Gas

- **Insufficient Power** - If the glow plug is not getting enough power, it will not get ignite the gas.
- **Thin Wire** - The recommended minimum wire gauge is 12AWG . If wire is less than 12-gauge there may not be enough power to get the igniter hot enough.
- **No Gas** - Was the gas line purged of air? If gas line was not bled it may take a while before the gas gets to the fire feature.
- **Manual Shut Off Valve** - Is the manual shut-off or key valve open?
- **Debris** - Debris can get trapped inside the screen of the gas valve. Excessive amounts of pipe dope or Teflon tape can restrict gas flow.
- **Debris in Pilot Burner** - New gas lines, until bled, have air and will have some debris. Ensure gas it turned OFF and electrical is unplugged. Remove the two brass fitting from the gas valve, then use “canned air” to blow through the pilot outlets.
- **Wrong Pilot Orifice** - If the wrong pilot orifice is installed into the primary pilot it will not light.
- **Oxygen Starvation** - To ignite gas we need oxygen, fuel and a heat source. If the pilot assembly is buried underneath the glass media or lava rock it will not allow the pilot to light.
- **Weak Igniter** - In some cases, from the manufacturer’s glow plug will have slight difference in assembly which can cause some igniter’s burn hotter than others. These are tested before they are sent to customers but sometimes a weak one can get out. If this occurs, the symptom will always be the same - inconsistent or no ignition at all. In this case, replace the pilot burner.

4. Pilot Lights, But No Flame to the Main Burner

- **Valve Box Installed Backwards -** Check the label on the gas valve box and ensure the burner is connected to the OUTLET side of the gas valve box.
- **Thermopile Pins Not Secure** - Check the pins in the pilot burner connector, remove it from the gas valve and check for loose pins. If loose, push inward until tight and try again. If this happens, the glow plug will stay ON for up to 30 seconds before turning OFF. It normally shuts off in about 5 seconds.
- **Defective Thermopile** - Thermopile’s rarely go bad however if a product is used consistently for extended periods of time a thermopile can get too hot (like a blow torch) and eventually cause it to swell. Simply loosen the thermopile from the pilot assembly and slide it out. If it will not slide out because is it too tight, then it will need to be replaced.
- **Debris** - Debris can get trapped inside the screen of the gas valve. Over time rust and other debris can restrict the gas flow on the Outlet screen of the valve that can partially or sometimes even stop the flow. Inspect the screen, remove it and clean it then replace it.
- **Defective Controller or Main Gas Valve** - If you have inspected the thermopile connections and no debris is on the controller or gas valve; checked the power, then the gas valve or controller may be defective and will need replaced.

5. Fire Features Lights... Turns OFF Within A Few Seconds... and Restarts Again (Keeps repeating this sequence)

- **Gas Volume Insufficient -** When initially turning ON the fire feature pilot is lit and there is enough gas for the pilot to light, however once main gas valve is turned ON, the flow of gas to pilot drops not providing enough gas to keep the thermopile hot enough therefore the pilot will drop out and relight. This is usually caused by insufficient Gas Volume and can be caused by installing gas pipe too small to deliver proper amount of gas or by installing a Manual Gas Shutoff (Ball valve or Key Valve) with a capacity that is too small to allow enough gas to pass through to the feature.
- **Main Burner Orifice Not Installed** - Ensure the correct orifice is being used. If using LP gas it should have vent holes, Natural gas does not. See Fig. 3, page 8. The orifice/air mixer restricts the amount of gas flowing to the Main Burner. This restriction ensures that not ALL the gas will flow to the Main Burner, so there is still enough gas left for Pilot Burner.
- **Oxygen Starvation** - to ignite gas we need oxygen, fuel and a heat source. If the pilot assembly is buried underneath the glass media or lava rock it will not allow the pilot to light.
- **Defective Thermopile** - See Symptom 4, page 29 for Defective Thermopile.
- **Defective Controller** – If your plumbing is supplying enough gas, the Main Burner orifice is installed, the Pilot Burner is getting plenty of air and the Thermopile is not defective the only thing left is a Defective Controller inside the valve box. If you have a Defective Controller the only way to fix it is to replace it.

6. Fire Feature Cycles (Turns On and Off) Every Few Minutes

- **Gas Volume Insufficient** – See symptom 5 page 29 for “Gas Volume Insufficient” for detailed explanation.
- **Oxygen Starvation (Pilot Burner)** – See symptom 5 page 29 for “Oxygen Starvation” for detailed explanation.
- **Defective Thermopile** – See symptom 4 page 29 for “Defective Thermopile” for detailed explanation
- **Defective Controller** – See symptom 5 page 29 for “Defective Controller” for detailed explanation

7. Main Burner Flame Lazy/Small or Flame NOT Spread Out Over Entire Burner

- **Gas Volume Insufficient** – See symptom 5, page 29 for “Gas Volume Insufficient” for detailed explanation
- **Debris On Inlet Screen; Valve Box** – See symptom 3, symptom 4, page 29 for “Debris on inlet screen for detailed explanation
- **Debris On Outlet Screen; Valve Box** – See symptom 4, page 29 for “Debris on Outlet Screen for detailed explanation.
- **Obstruction In Plumbing Between Gas Valve Outlet and Main Burner** – If your plumbing was sized correctly to deliver the proper amount of gas and the screens in the valve box are clean, inspect the plumbing between the valve and the burner for obstructions. Also, inspect inside the burner inlet to ensure no obstructions in there as well.

8. Main Burner Flame “Flares Up” Every Few Minutes

- **Fire glass/Media Layer too Thick** – Fire glass/media comes in different sizes. Use only ½” - ¾” diameter. If you put a thick layer of fire glass/media on top the burner, over 1” in depth; there is a good chance some of the gas will get “trapped” within the media while the feature is ON. When this happens, the trapped gas in the fire feature ignites and you see the “*Flare Up*” effect. Remove some of the fire glass/media from the burner to see if this fixes the problem.
- **Gas Leak** – Natural Gas is lighter than air therefore when released into the atmosphere it rises. If you have a Natural Gas fire feature and there is a gas leak the Natural Gas will rise to the top of the feature. Once it encounters the flame a flare up will occur. Propane is heavier than air so if there is a gas leak when using propane the gas will fall into the bottom of the feature. That is why it is REQUIRED drainage/ventilation be installed at the bottom of the feature when using Propane. You do NOT want Propane accumulating inside the fire feature.

SHUTDOWN ISSUES

9. Turn the Feature OFF…but a Small Flame Continues to Burn in the Pilot Burner

- **Leak in the Pilot Burner Gas Valve** – When debris enters the gas valve by way of either the Inlet or outlet there is a chance some of that debris will enter the Pilot Burner Gas Valve and contaminate the seal inside the valve. If this occurs, the possibility exists the valve will not seal properly when turned **OFF** thereby allowing a small amount of gas to flow even after being turned OFF. Often this will result in a small flame that continues to burn in the Pilot Burner after the feature has been turned OFF.

10. Turn the Feature OFF…but Small Flames Continue to Burn Out the Main Burner

- **Leak in the Main Burner Gas Valve** - when debris enters the gas valve by way of either the Inlet or Outlet there is a chance some of that debris will enter the Main Burner Gas Valve and contaminate the seal inside the valve. If this occurs the possibility exists the valve will not seal properly when turned off thereby allowing a small amount of gas to flow even after turned off. Often this will result in a small flame that continues to burn on the Main Burner after the feature has been turned OFF.

OPTIONAL ACCESSORIES

The following accessories are available from your local Firegear Outdoors dealer/distributor.
Each accessory comes with a separate installation manual. Read each instruction thoroughly before installing.

Emergency Stop
(Emergency shut-off valve)

Model: FG-EMER-STOP (includes J-Box and weatherproof cover)

Timer
(*Me*chanical gas timer)

Model: FG-TIMER- 2HR
* Includes weatherproof J-box and cover

ON-OFF Switches

Model: FG-WS-OD (On-Off Wall Switch; includes J-Box and weather-proof cover)

FlexFrame

Model: FLEXFRAME-SS (2pc.)
FLEXFRAME-SS3 (3pc.)

Universal brackets to support fire pit when using paver blocks or other non-combustible enclosures.

Glass Windshields
See catalog for a windshield to fit your application.

Shut-Off Valves
Model: 01-387 ⅜" OD Flare x ½" FIP
Model: 01-487 ½" OD Flare x ½" FIP
Model: 01-266
⅜" OD Flare x ⅜" OD Flare
Model: 01-288
½" OD Flare x ½" OD Flare

Vent Kits
Model: VENT-KIT-6X12SS
(provides 18 sq. in of ventilation per side of enclosure)
Model: PAVER-VENT-4LNTS
Model: PAVER-VENT-6LNTS

Paver-Control Panel

Model: PAVER-CP-MT

For use with SWR blocks, includes lintel, screws, fittings, Tapcon concrete anchors, face plate with key valve

Log Sets
Model:
L-SF (Spit Fire) - 17pc (52lbs)
L-BF (Beach Fire) 8pc (20lbs)
L-Sedona (Sedona) 19pc (200lbs)
326-930 Twigs 6pc (20lbs)
Note: When installing log sets on fire features additional support of the burner pan may be necessary.

LP Conversion Kit

Model: FG-AWS-PBO-P

Contains primary pilot orifice (FG-PBO-LP) to convert Natural gas pilot to LP gas.
Note: In addition, requires new LP gas main burner orifice (sold separately).

See table in next column for proper LP gas main burner orifice →

LP Main Burner Orifice #

Model	LP Orifice #
FPB-25SFBSAWS-N	OAS-LP30
FPB-26DBSAWS-N	OAS-LP41
FPB-29DBSAWS-N	OAS-LP30
FPB-29RBSAWS-N	OAS-LP30
FPB-30SFBSAWS-N	OAS-LP30
FPB-33RBSAWS-N	OAS-LP28
FPB-34DBSAWS-N	OAS-LP28
FPB-40SFBSAWS-N	OAS-LP22
FPB-44DBSAWS-N	OAS-LP22

Pool/Spa (Water Installations)

Model: FG-SCNG-FS30VDK

Contains complete AWS kit for one fire feature installed within 5-feet of a pool/spa. Must order separate power supply below.

Model: FG-PS-30V320
Power supply for one or up to (4) fire features near a pool/spa.

Must order any Firegear Outdoor Match Throw (MT) Burning Spur fire pit to use with kit listed above (sold separately).

Note: See the Firegear Outdoors catalogue for a variety of fittings and flex connectors also available.

firegear Outdoors
A DIVISION OF SKYTECH PRODUCTS GROUP

LIMITED WARRANTY

Skytech Products Group (Firegear Outdoors) hereby warrants to the end user that products will be free from material and workmanship defects that prevent safe and correct operation of the product. The warranty commences from date of sale to the end user for the following period:

CONSUMER/NON-COMMERCIAL APPLICATIONS:

Stainless Steel Components	5 Years
Gas Valve, Spark Igniter & Electronic Parts	2 Years
Log Sets	5 Years
Glass Windshields	5 Years
Glass Media	1 Year
Controls	5 Years
AnF Enclosures	5 Years
GFRC (Glass Fiber Reinforced Concrete)	1 Year

Lava Rock and Lava Stones are not covered by warranty

COMMERCIAL APPLICATIONS:

Stainless Steel Components	1 Year
Gas Valve, Spark Igniter & Electronic Parts	1 Year
Log Sets	1 Year
Glass Windshields	1 Year
Glass Media	1 Year
Controls	1 Year
AnF Enclosures	1 Year
GFRC (Glass Fiber Reinforced Concrete)	1 Year

Lava Rock and Lava Stones are not covered by warranty

End User must provide a bill of sale, canceled check, or payment record from the end user to verify purchase date and to establish warranty period. This Limited Warranty shall be valid and limited to the original purchaser only.

WARNING Any modification to the product will void the warranty.

This Limited Warranty shall be limited to the repair and/or replacement of parts that have proven to be defective under normal use and service. Before returning any parts, contact our Technical Service Department for a Return Materials Authorization (RMA) number. All warranty claims must be made by the OEM / Distributor / Dealer account on behalf of the end user. You may contact Technical Service at (855) 498-8324.

All approved returned defects must be confirmed by our Technical Service Department. If the defect is confirmed and we approve the claim, we will replace such parts without charge. This warranty gives you specific legal rights, and you may also have other rights, which vary from state to state.

Travel, diagnostic cost, service labor to repair the defect and freight charges on warranty parts to and from the factory will be responsibility of the owner. We will not be responsible for labor charges and/or damage incurred in installation, repair, and replacement.

This Limited Warranty is voided if not assembled, installed and operated as intended. This Limited Warranty does not cover any defects due to accident, abuse, misuse, alteration, misapplication, vandalism, improper installation or improper maintenance or service, removal from the original location or re- installation into another location, or failure to perform normal and routine maintenance.

Damage due to severe weather conditions such as hail, hurricanes, earthquakes, tornadoes, discoloration due to over-heating, exposure to chemicals (including salt), either directly or in the atmosphere, or very high humidity, is not covered by this Limited Warranty.

There are no other express warranties except as set forth herein. For consumer applications, any applicable implied warranties of merchantability and fitness are limited induration to the period of coverage of this Limited Warranty. Some states do not allow limitation on how long an implied warranty lasts, so this limitation may not apply to you.

For Commercial applications, the liability of Firegear Outdoors is limited to the express terms of this warranty. We expressly disclaim any and all implied warranties, including any warranties of fitness for a particular purpose or merchantability.

We are not liable for any special, indirect or consequential damages. Our maximum liability is limited to the purchase price of the purchased products. Some states do not allow the exclusion or limitation of incidental or consequential damages, so this limitation or exclusions may not apply to you.

We do not authorize any person or company to assume for it any other obligation or liability in connection with the sale, installation, use, removal, return, or replacement of its equipment; and no such representations are binding.

REV. 6/18

FOR TECHNICAL SERVICE, CALL: (855) 498-8324

Firegear Outdoors
9230 Conservation Way
Fort Wayne, IN 46809
Sales: (888) 672-8929
Sales Support: (888) 699-6167
Canadian Inquires: (877) 472-3923

Web Site: www.firegearoutdoors.com

Having problems getting your Firegear Outdoors fire feature to operate?
Don't leave the job site! We want to help! Call 855.498.8324
for Technical Support between the hours of 8:00AM to 5:00PM EST.
Text photos to 260.255.5750 or e-mail photos to support@skytechpg.com.

BEFORE YOU CALL WE WILL NEED THIS INFORMATION

1. Model Number: _____
2. Serial Number: _____
3. How long is the gas line run? Nat Gas ____ LP Gas ____
4. What size is gas line? _____
5. Inlet Gas Pressure: _____WC
   Manifold Gas Pressure: _____ WC
6. What type of media are you using? _____
7. Review the troubleshooting section in the installation manual.
8. What are the symptoms? Please be prepared to explain.
9. Be prepared to send photos to us when on the phone.
10. Missing or damaged parts? Let us know ASAP or send photos.