SUMMERSET
PROFESSIONAL GRILLS

33" Stainless Steel 3-Drawer & Access Door Combo

Model	**SSDC3-33**
Cutout Dimensions*	**W30 5/8" x H19 3/4" x D20 3/8"**
Overall Dimensions**	**W33" x H22" x D20 1/2"**

#304 North American Stainless Steel Construction

1/2" Return on Flange

Easy Glide Rail System w/ Soft Closure Feature

Double Lined for Extra Insulation

*** Manufacturer Suggested Cutout Dimensions**

**** Manufacturer Approximate Overall Dimensions**

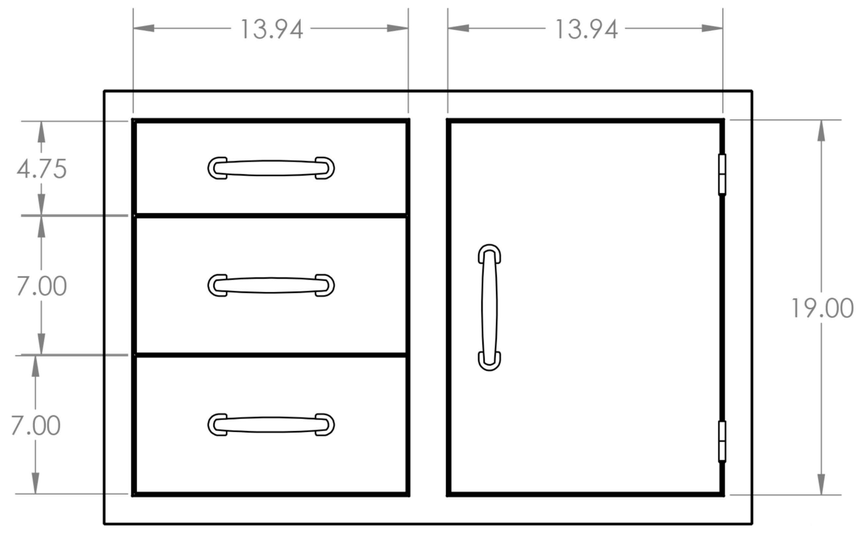

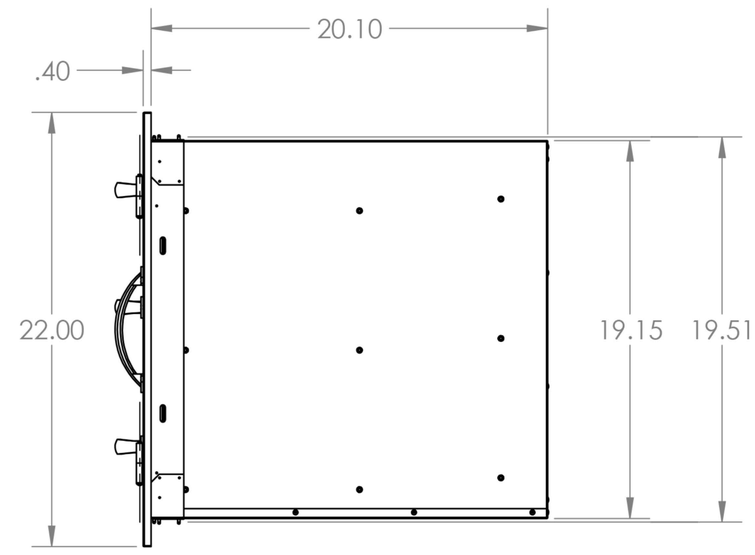

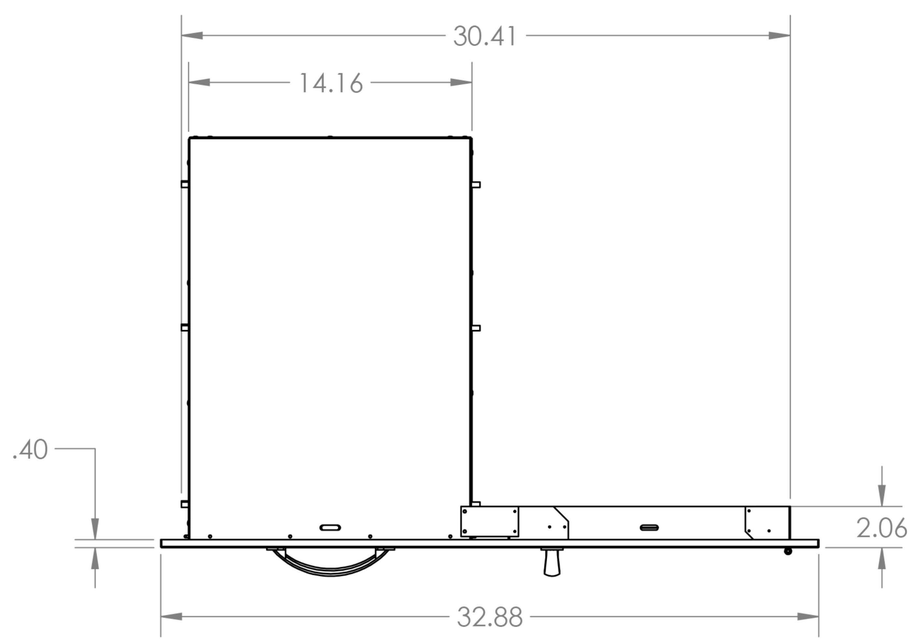

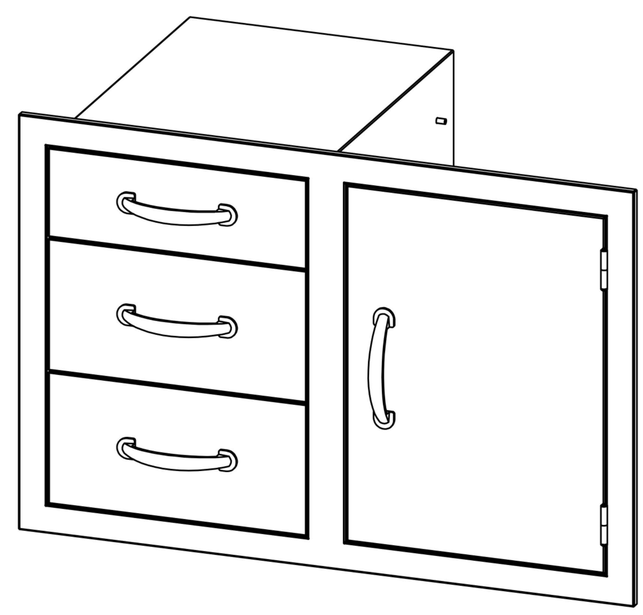

NOTES

Suggested Cutout Dimensions*

(W) 30 5/8" x (H) 19 3/4" x (D) 20 3/8"

Island Front View

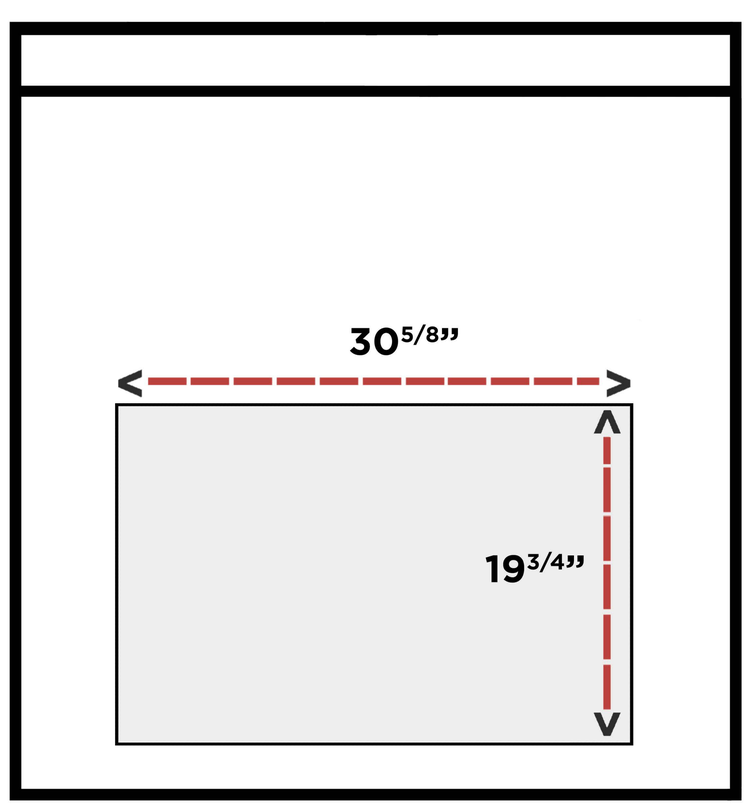
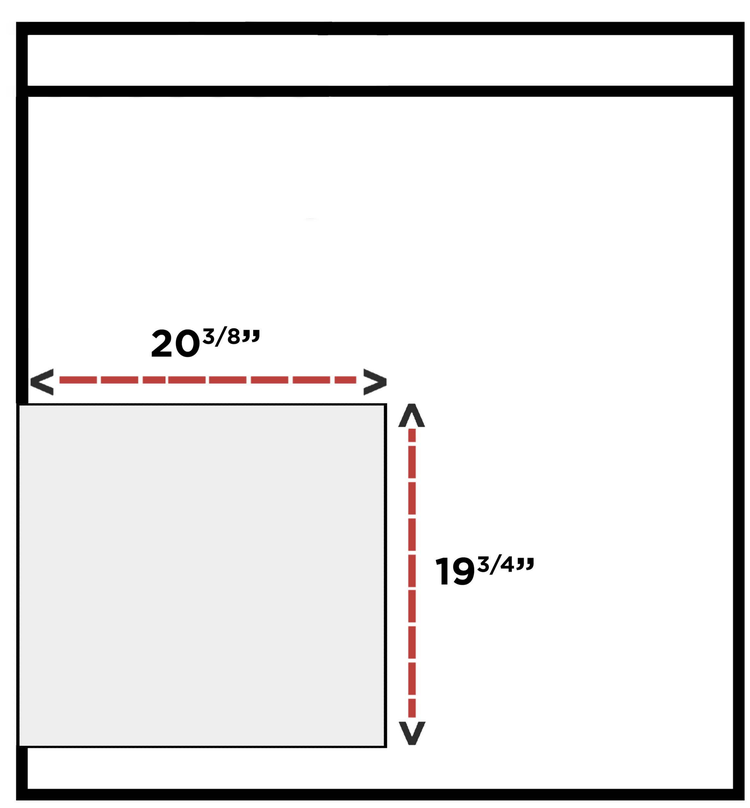
Island Side View