McDaniel Metals
281-987-8400 • 281-987-9494 (fax)
1318 Buschong, Houston, TX 77039
www.mcdanielmetals.com

2612ADJCURBGPM

2/12 TO 6/12 ADJUSTABLE CURB FITS DAIKIN DP**G/DM**, DP**C/H**M AND GOODMAN GPG-APG****M, GPC/H-APC/H****M ALL CHASSIS

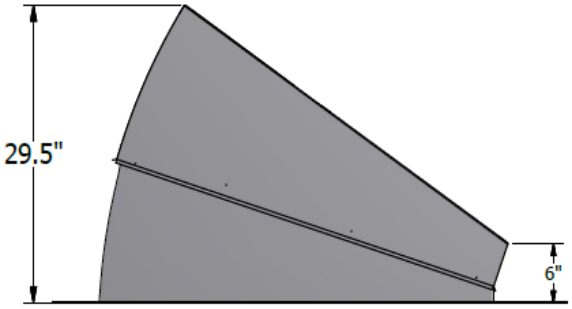

6/12 PITCH

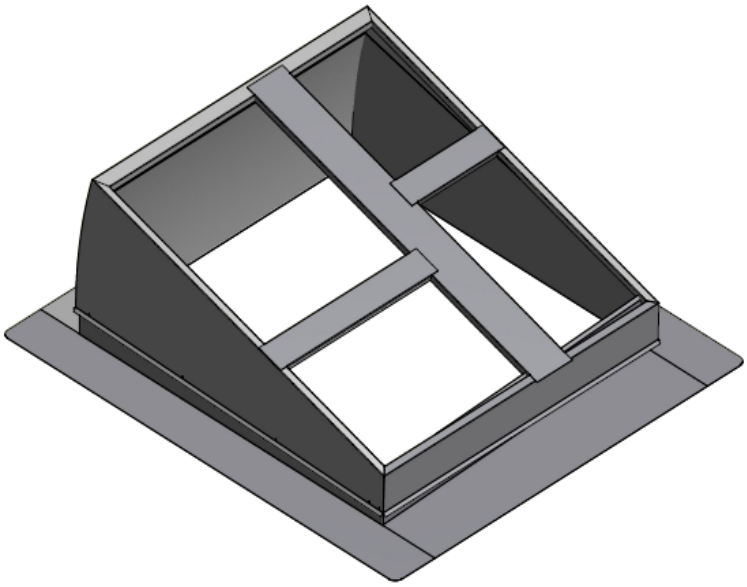

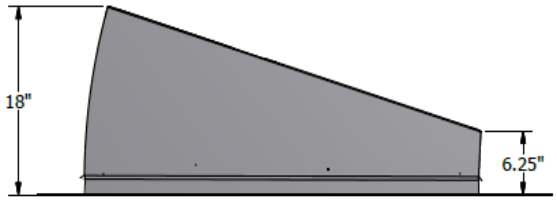

3/12 PITCH

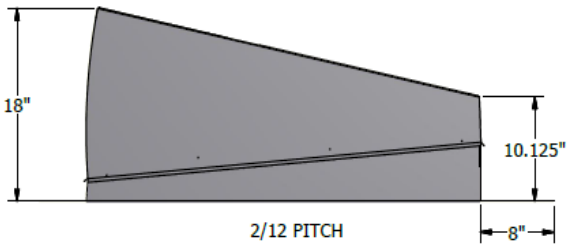
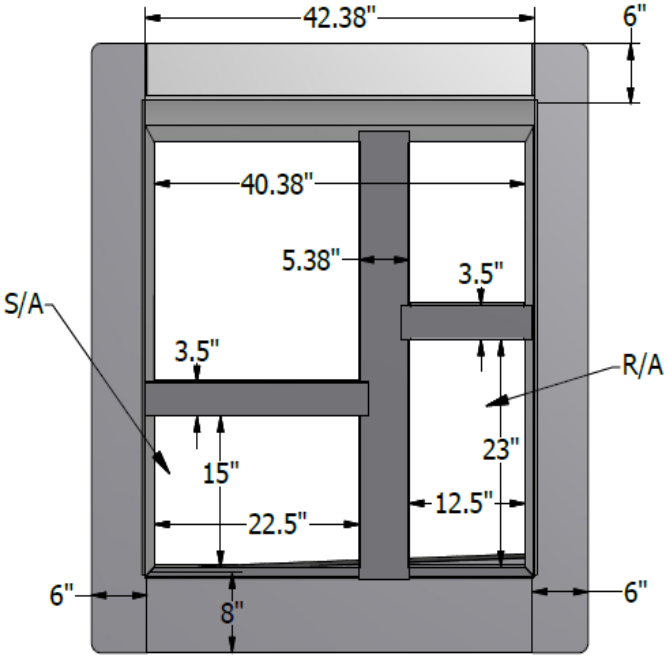
2/12 PITCH