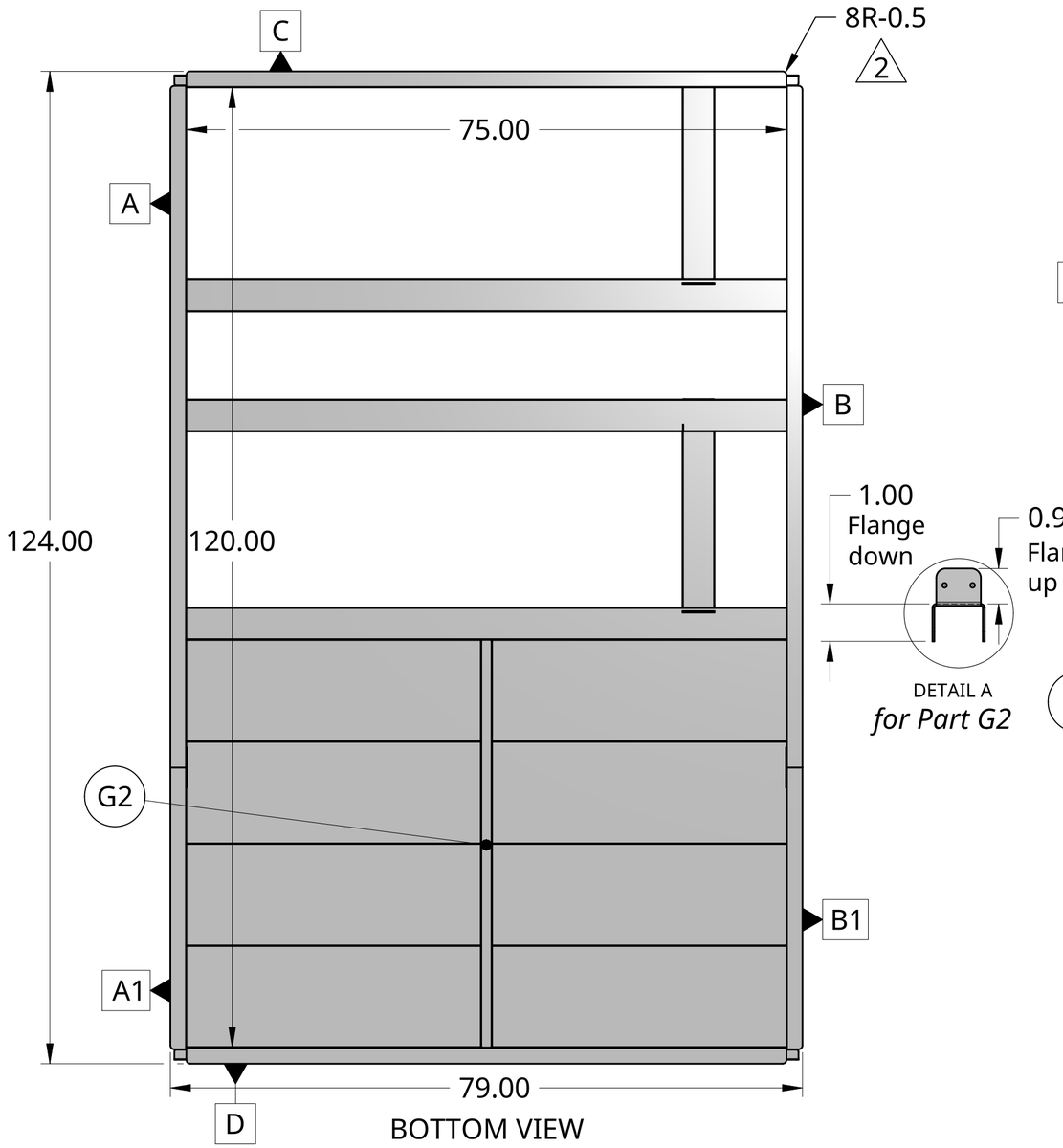

BOTTOM VIEW

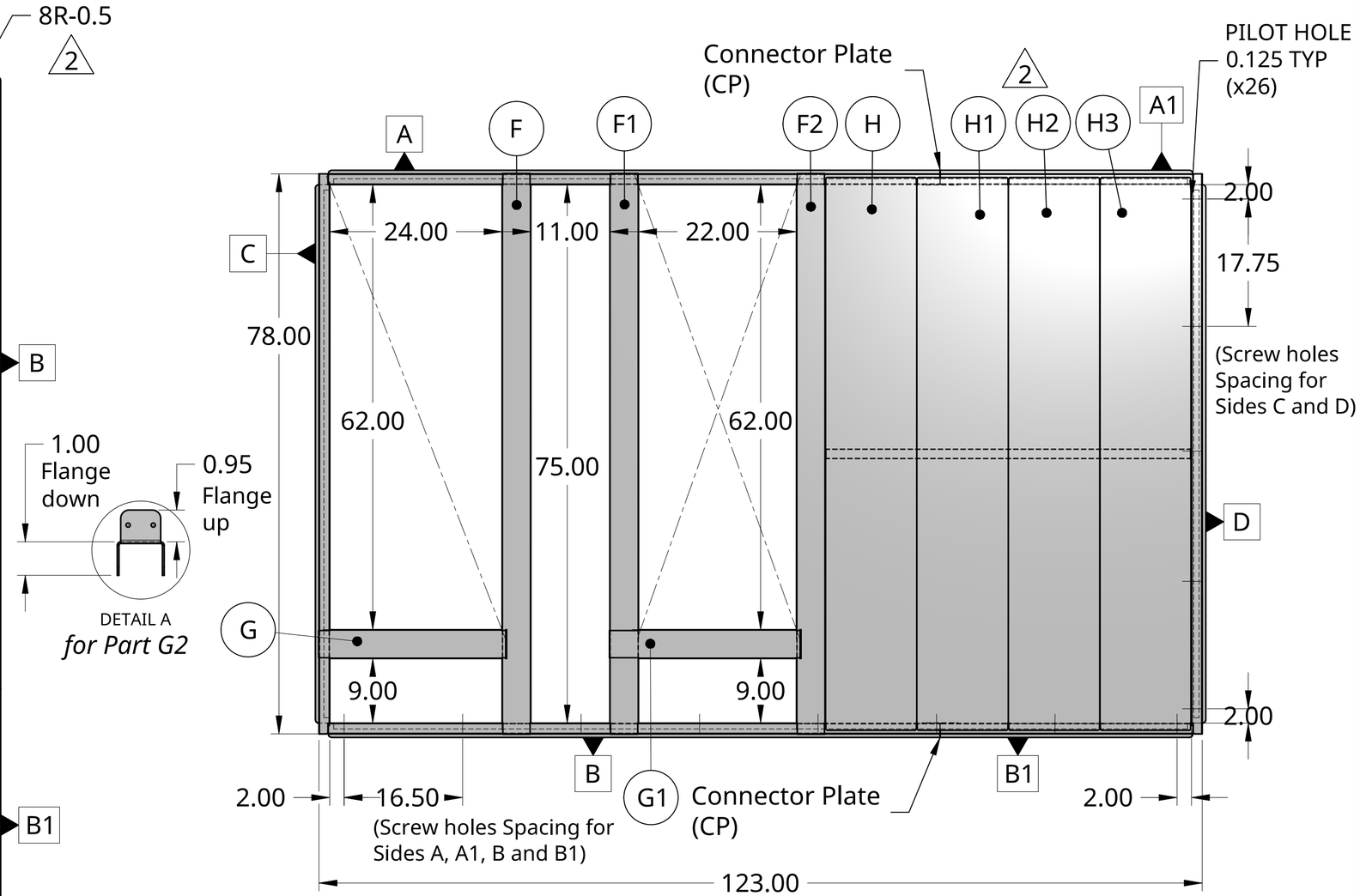

TOP VIEW

Note:
1. Insulation refer to page 2.
2. Connector Plate refer to page 3.
3. Revision table refer to page 4.

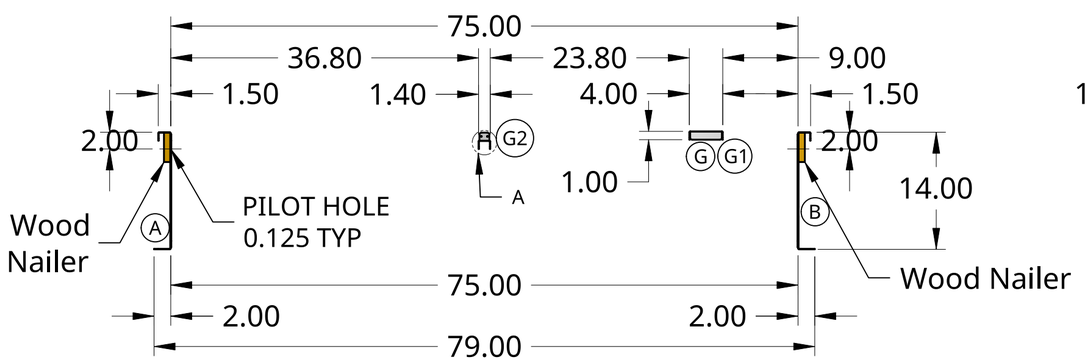

FRONT VIEW

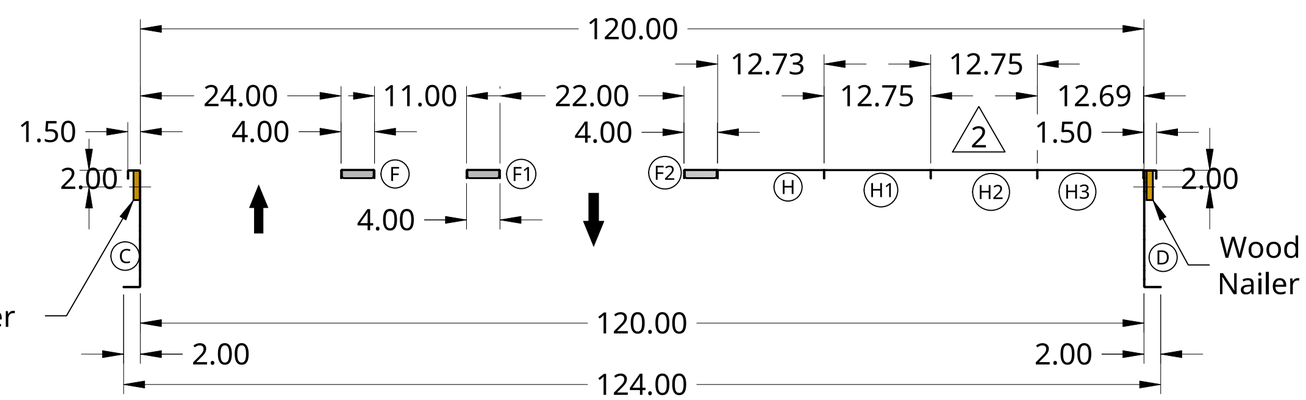

RIGHT SIDE VIEW

© Copyright 2024, Kurb Software LLC. All Rights Reserved

POWERED BY KURB™

MATERIAL 16GA STEEL GALVANIZED		NAME	DATE	DESCRIPTION KNOCKDOWN CURB	PRODUCT CODE KD14-J1502	TAG#	DWG. NO. KD14-J1502	REV 3
WEIGHT 210.24LB	DRAWN	JDG	11/22/2024	Design Approved by: _____ on Date: _____		SIZE C		
DO NOT SCALE DRAWING	QC BY	---	--/--/----			SCALE: 1:14	GASKET 57'	SHEET 1 OF 4