BUCKSTOVE
Unmatched American Quality

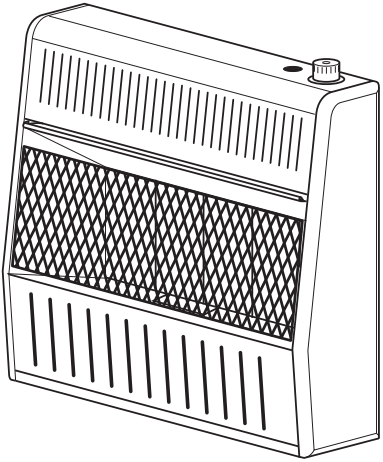

INFRARED
VENT-FREE
GAS SPACE HEATER
OWNER'S OPERATION AND INSTALLATION MANUAL

THERMOSTAT CONTROL
MODELS
IFR18K-NG, IFR15K-LP
IFR30K-NG, IFR25K-LP

PFS® US

F111-003
CSA/ANS
Z21.11.2- 2019
UNVENTED
ROOM HEATERS

⚠ WARNING: If the information in this manual is not followed exactly, a fire or explosion may result causing property damage, personal injury or loss of life.

— Do not store or use gasoline or other flammable vapors and liquids in the vicinity of this or any other appliance.

— WHAT TO DO IF YOU SMELL GAS

- **Do not try to light any appliance.**
- **Do not touch any electrical switch; do not use any phone in your building.**
- **Immediately call your gas supplier from a neighbor's phone. Follow the gas supplier's instructions.**
- **If you cannot reach your gas supplier, call the fire department.**

— Installation and service must be performed by a qualified installer, service agency or the gas supplier.

INSTALLER: Leave this manual with the appliance.
CONSUMER: Retain this manual for future reference.

Questions, problems, missing parts? Before returning to your retailer, Email Customer Service at info@buckstove.com

TABLE OF CONTENTS

Safety 3
Qualified Installing Agency 4
Specifications 5
Product Features 5
Local Codes 6
Product Identification 6
Unpacking 6
Water Vapor: A By-Product Of Unvented Room Heaters 7
Air For Combustion and Ventilation 7
Installation 9
Operation 16
Inspecting Heater 18
Care And Maintenance 19
Troubleshooting 20
Parts 23
Replacement Parts 27
Service Hints 27
Technical Service 27
Accessories 27
Warranty 28

SAVE THIS BOOK

This is an unvented gas-fired heater. It uses air (oxygen) from the room in which it is installed. Provisions for adequate combustion and ventilation air must be provided. Refer to *Air For Combustion and Ventilation* section on page 7 of this manual.

⚠ WARNING: FIRE, EXPLOSION AND ASPHYXIATION HAZARD

IMPROPER ADJUSTMENT, ALTERATION, SERVICE, MAINTENANCE, OR INSTALLATION OF THIS HEATER OR ITS CONTROLS CAN CAUSE DEATH OR SERIOUS INJURY.

READ AND FOLLOW INSTRUCTIONS AND PRECAUTIONS IN USER'S INFORMATION MANUAL PROVIDED WITH THIS HEATER.

This appliance may be installed in an aftermarket,* permanently located, manufactured (mobile) home, where not prohibited by local codes.

This appliance is only for use with the type of gas indicated on the rating plate. This appliance is not convertible for use with other gases.

*** Aftermarket: Completion of sale, not for purpose of resale, from the manufacturer.**

IMPORTANT: Read this owner's manual carefully and completely before trying to assemble, operate, or service this heater. Improper use of this heater can cause serious injury or death from burns, fire, explosion, electrical shock and carbon monoxide poisoning.

Only a qualified installer, service agent, or local gas supplier may install and service this product.

⚠ WARNING: Keep the appliance area clear and free from combustible materials, gasoline, and other flammable vapors and liquids.

⚠ This heater is equipped for either natural or propane gas. Field conversion is not permitted.

This appliance is only for use with the type of gas indicated on the rating plate. This appliance is not convertible for use with other gases.

⚠ DANGER: Carbon monoxide poisoning may lead to death!

CARBON MONOXIDE POISONING: Early signs of carbon monoxide poisoning resemble the flu, with headaches, dizziness or nausea. If you have these signs, the heater may not be working properly. Get fresh air at once! Have heater serviced. Some people are more affected by carbon monoxide than others. These include pregnant women, people with heart or lung disease or anemia, those under the influence of alcohol and those at high altitudes.

NATURAL AND PROPANE GAS: Natural and propane gas are odorless. An odor-making agent is added to the gas. The odor helps you detect a gas leak. However, the odor added to the gas can fade. Gas may be present even though no odor exists.

⚠ WARNING: Do not use any accessories not approved for use with this heater.

⚠ WARNING: Carefully supervise young children when they are in the room with the heater.

⚠ WARNING: The fire screen or guard designed for this unvented appliance must be installed prior to operation.

⚠ WARNING: Due to high temperatures, the appliance should be located out of traffic and away from furniture and draperies.

⚠ WARNING: Do not place clothing or other flammable material on or near the appliance. Never place any objects in the heater.

⚠ WARNING: Heater becomes very hot when running. Keep children and adults away from hot surfaces to avoid burns or clothing ignition.

SAFETY

1. Do not place Propane supply tank(s) inside any structure. Propane supply tank(s) must be placed outdoors.
2. This heater shall not be installed in a bedroom or bathroom.
3. This heater needs fresh air ventilation to run properly. This heater has an Oxygen Depletion Sensing (ODS) safety shutoff system. The ODS shuts down the heater if not enough fresh air is available. See Air for *Combustion and Ventilation*, pages 7 and 8. If heater keeps shutting off, see *Troubleshooting*, pages 20 through 22.
4. Keep all air openings in front and bottom of heater clear and free of debris. This will ensure enough air for proper combustion.
5. If heater shuts off, do not relight until you have provided fresh, outside air. If heater keeps shutting off, have it serviced.
6. Do not run heater:
   - Where flammable liquids or vapors are used or stored.
   - Under dusty conditions.
   - Outdoors.
7. Before using furniture polish, wax, carpet cleaner, or similar products, turn heater off. If heated, the vapors from these products may create a white powder residue within burner box or on adjacent walls or furniture.
8. Do not use heater if any part has been under water. Immediately call a qualified service technician to inspect the room heater and to replace any part of the control system and any gas control which has been under water.
9. Turn off and unplug heater and let cool before servicing. Only a qualified service person should service and repair heater.
10. Operating heater above elevations of 4,500 feet could cause pilot outage.
11. To prevent performance problems, do not use propane fuel tank of less than 100 lbs. capacity.
12. This appliance is for indoor operation and should not be installed outdoors.

QUALIFIED INSTALLING AGENCY

Only a qualified agency should install and replace gas piping, gas utilization equipment or accessories. Repair and equipment servicing should allways be done by a qualified agency.. The term “qualified agency” means any individual, firm, corporation, or company that either in person or through a representative is engaged in and is responsible for:

a) Installing, testing, or replacing gas piping or

b) Connecting, installing, testing, repairing, or servicing equipment; that is experienced in such work; that is familiar with all precautions required; and that has complied with all the requirement of the authority having jurisdiction.

SPECIFICATIONS

MODEL	IFR18K-NG	IFR15K-LP
Ignition	Piezo	Piezo
Gas Type	Natural Gas	Propane
BTU (available)	18,000	15,000
Pressure Regulator Setting	6" W.C.	10" W.C.
Inlet Gas Pressure* (inches of water)	Maximum 10.5"	Maximum 14"
	Minimum 7"	Minimum 11"
Heater Dimensions (HxWxD)	23 1/2" × 19 1/4" × 8"	23 1/2" × 19 1/4" × 8"
Carton Dimensions (HxWxD)	25 3/4" × 21 3/4" × 9 1/4"	25 3/4" × 21 3/4" × 9 1/4"
Heater Weight	24 lbs	24 lbs
Shipping Weight	27 lbs	27 lbs

MODEL	IFR30K-NG	IFR25K-LP
Ignition	Piezo	Piezo
Gas Type	Natural Gas	Propane
BTU (available)	30,000	25,000
Pressure Regulator Setting	7" W.C.	10" W.C.
Inlet Gas Pressure* (inches of water)	Maximum 10.5"	Maximum 14"
	Minimum 7"	Minimum 11"
Heater Dimensions (HxWxD)	23 1/2" × 26 5/8" × 8"	23 1/2" × 26 5/8" × 8"
Carton Dimensions (HxWxD)	25 3/4" × 28 1/2" × 9 1/4"	25 3/4" × 28 1/2" × 9 1/4"
Heater Weight	31 lbs	31 lbs
Shipping Weight	36 lbs	36 lbs

PRODUCT FEATURES

SAFETY PILOT

This heater has a pilot with an Oxygen Depletion Sensing (ODS) safety shutoff system. The ODS/pilot shuts off the heater if there is not enough fresh air.

PIEZO IGNITION SYSTEM

This heater is equipped with a piezo ignitor. this system requires no matches, batteries, or other sources to light heater.

THERMOSTATIC CONTROL

These heaters have a control valve with a thermostat sensing bulb. It is able to react to changes in room temperature by switching the burner on or off. This results in the greatest heater comfort and may result in lower gas bills.

LOCAL CODES

Install and use heater with care. Follow all local codes. In the absence of local codes, use the latest edition of *The National Fuel Gas Code, ANSI Z223.1/NFPA 54**.

*Available from:

American National Standards Institute, Inc.
1430 Broadway
New York, NY 10018

National Fire Protection Association, Inc.
1 Batterymarch Park
Quincy, MA 02269-9101

State of Massachusetts: The installation must be made by a licensed plumber or gas fitter in the Commonwealth of Massachusetts.

Sellers of unvented propane or natural gas-fired supplemental room heaters shall provide to each purchaser a copy of 527 CMR 30 upon sale of the unit.

In the State of Massachusetts the gas cock must be a T-handle type. The State of Massachusetts requires that a flexible appliance connector cannot exceed three feet in length.

PRODUCT IDENTIFICATION

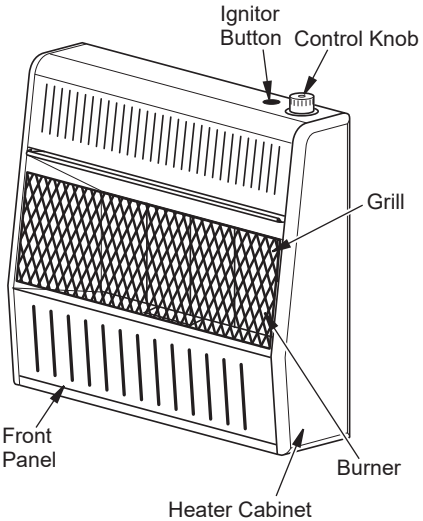

Figure 1 - Vent-Free Gas Heater

UNPACKING

1. Remove heater from carton.
2. Remove all protective packaging applied to heater for shipping.
3. Check heater for any shipping damage. If heater is damaged, promptly inform dealer where you bought heater.

WATER VAPOR: A BY-PRODUCT OF UNVENTED ROOM HEATERS

Water vapor is a by-product of gas combustion. An unvented room heater produces approximately one (1) ounce (30 mL) of water for every 1,000 BTUs (0.3 KWs) of gas input per hour. Unvented room heaters are recommended as supplemental heat (a room) rather than a primary heat source (an entire house). In most supplemental heat applications, the water vapor does not create a problem. In most applications, the water vapor enhances the low humidity atmosphere experienced during cold weather.

The following steps will help ensure that water vapor does not become a problem:

1. Be sure the heater is sized properly for the application, including ample combustion air and circulation air.
2. If high humidity is experienced, a dehumidifier may be used to help lower the water vapor content of the air.
3. Do not use an unvented room heater as the primary heat source.

AIR FOR COMBUSTION AND VENTILATION

⚠ WARNING: This heater shall not be installed in a confined space or unusually tight construction unless provisions are provided for adequate combustion and ventilation air. Read the following instructions to ensure proper fresh air for this and other fuel-burning appliances in your home.

Today's homes are built more energy efficient than ever. New materials, increased insulation and new construction methods help reduce heat loss in homes. Homeowners weather strip and caulk around windows and doors to keep the cold air out and the warm air in. During heating months, homeowners want their homes as airtight as possible.

While it is good to make your home energy efficient, your home needs to breathe. Fresh air must enter your home. All fuel-burning appliances need fresh air for proper combustion and ventilation.

Exhaust fans, fireplaces, clothes dryers and fuel burning appliances draw air from the house to operate. You must provide adequate fresh air for these appliances. This will ensure proper venting of vented fuel-burning appliances.

⚠ WARNING: This heater shall not be installed in a room or space unless the required volume of indoor combustion air is provided by the method described in the *National Fuel Gas Code, ANSI Z223.1/NFPA 54,* the *International Fuel Gas Code,* or applicable local codes.

⚠ WARNING: If the area in which the heater may be operated does not meet the required volume for indoor combustion air, combustion and ventilation air shall be provided by one of the methods described in the *National Fuel Gas Code, ANSI Z223.1/NFPA 54,* the *International Fuel Gas Code,* or applicable local codes.

VENTILATION AIR

Ventilation Air From Inside Building

This fresh air would come from an adjoining unconfined space. When ventilating to an adjoining unconfined space, you must provide two permanent openings: one within 12" of the ceiling and one within 12" of the floor on the wall connecting the two spaces (see options 1 and 2, Figure 2). You can also remove door into adjoining room (see option 3, Figure 2). Follow the *National Fuel Gas Code, ANSI Z223.1/NFPA 54, Air for Combustion and Ventilation* for required size of ventilation grills or ducts.

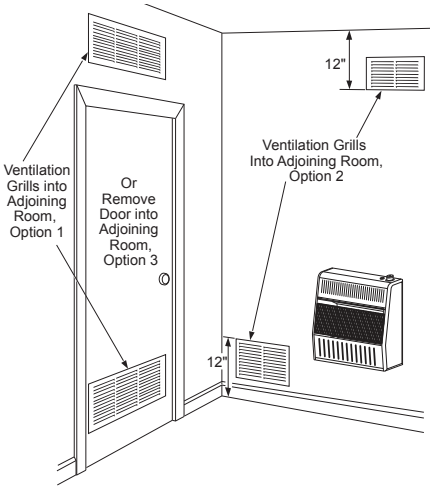

Figure 2 - Ventilation Air from Inside Building

Ventilation Air From Outdoors

Provide extra fresh air by using ventilation grills or ducts. You must provide two permanent openings: one within 12" of the ceiling and one within 12" of the floor. Connect these items directly to the outdoors or spaces open to the outdoors. These spaces include attics and crawl spaces. Follow the *National Fuel Gas Code, ANSI Z223.1/NFPA 54, Air for Combustion and Ventilation* for required size of ventilation grills or ducts.

IMPORTANT: Do not provide openings for inlet or outlet air into attic if attic has a thermostat-controlled power vent. Heated air entering the attic will activate the power vent. Rework worksheet, adding the space of the adjoining unconfined space. The combined spaces must have enough fresh air to supply all appliances in both spaces.

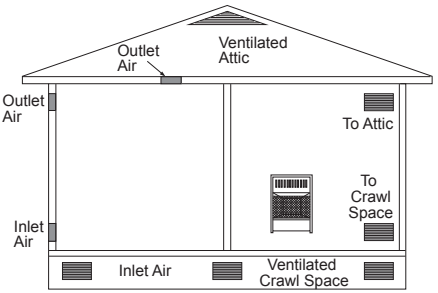

Figure 3 - Ventilation Air from Outdoors

NOTICE: This heater is intended for use as supplemental heat. Use this heater along with your primary heating system. Do not install this heater as your primary heat source. If you have a central heating system, you may run the system's circulating blower while using heater. This will help circulate the heat throughout the house. In the event of a power outage, you can use this heater as your primary heat source.

⚠ CAUTION: When installing heater in a home garage:

- **Heater pilot and burner must be at least 18" above floor.**
- **Locate heater where moving vehicle will not hit it.**

⚠ WARNING: A qualified service person must install heater. Follow all local codes.

⚠ WARNING: Never install the heater:
- **In a bedroom or bathroom.**
- **In a recreational vehicle.**
- **Where curtains, furniture, clothing, or other flammable objects are less than 36" from the front, top, or sides of the heater.**
- **In high traffic areas.**
- **In windy or drafty areas.**
- **Outdoors.**

IMPORTANT: Vent-free heaters add moisture to the air. Although this is beneficial, installing heater in rooms without enough ventilation air may cause mildew to form if there is too much moisture present. See *Air for Combustion and Ventilation*, pages 7 and 8.

CHECK GAS TYPE

Be sure your gas supply is right for your heater. Otherwise, call dealer where you bought the heater for proper type heater.

CLEARANCES TO COMBUSTIBLES

Carefully follow the instructions below. This heater is a freestanding unit designed to be mounted on a wall or set on a base.

⚠ WARNING: Maintain the minimum clearances shown in Figure 4. If you can, provide greater clearances from floor, ceiling, and joining wall.

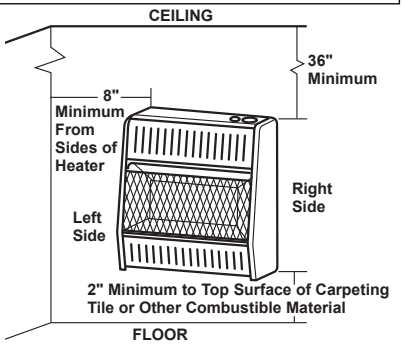

Figure 4 - Mounting Clearances as Viewed From Front of Heater

⚠ CAUTION: This heater creates warm air currents. These currents move heat to wall surfaces next to heater. Installing heater next to vinyl or cloth wall coverings or operating heater where impurities (such as tobacco smoke, aromatic candles, cleaning fluids, oil or kerosene lamps, etc.) in the air exist, may cause walls to discolor.

LOCATING HEATER

This heater is designed to be mounted on a wall. You can locate heater on the floor, away from a wall. An optional floor mounting stand is needed. See *Installation of Base Stand*, page 12.

For convenience and efficiency, install heater:

1. Where there is easy access for operation, inspection, and service.
2. In the coldest part of room.

An optional fan kit is available from your dealer See *Accessories*, page 27. If planning to use fan, locate heater near an electrical outlet.

RELOCATING THERMOSTAT SENSING BULB (OPTIONAL)

This may be done if the thermostat does not seem to be reacting correctly to changes in the room temperature.

1. Pull out the sensing bulb from the two clips located in the shipping position according to the direction as shown by the arrow. There is no need to take out the two original bulb clips.

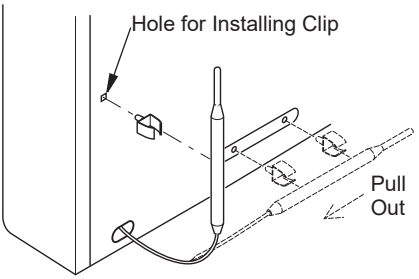

Figure 5 - Moving Thermostat Sensing Bulb

FASTENING HEATER TO WALL

Mounting Bracket

The mounting bracket is located on back panel of heater (see Figure 6). It has been taped there for shipping. Remove mounting bracket from back panel.

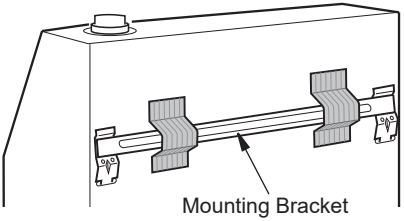

Figure 6 - Mounting Bracket Location

Removing Front Panel of Heater

1. Remove two screws near bottom corners of lower front panel.
2. Pull bottom of lower front panel forward, then down (see Figure 7).

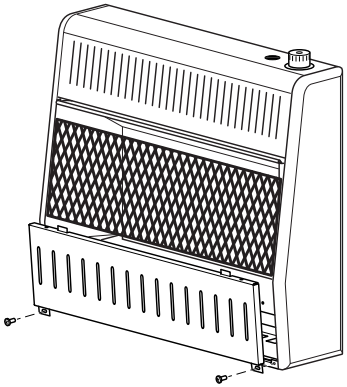

Figure 7 - Removing Front Panel Of Heater

Methods For Attaching Mounting Bracket To Wall

Use only the last hole on each end of mounting bracket to attach bracket to wall. Attach mounting bracket to a wall only in one of two ways:

1. ***Attaching to wall stud:*** This method provides the strongest hold. Insert mounting screws through mounting bracket and into wall studs.
2. ***Attaching to wall anchor:*** This method allows you to attach mounting bracket to hollow walls (wall areas between studs) or to solid walls (concrete or masonry).

Decide which method better suits your needs. Either method will provide a secure hold for the mounting bracket.

Marking Screw Locations

1. Tape mounting bracket to wall where heater will be located. Make sure mounting bracket is level.

⚠ WARNING: Maintain minimum clearances shown in Figure 4, page 9. If you can, provide greater clearances from floor and joining wall.

2. Mark screw locations on wall (see Figure 8). *Note: Mark only last hole on each end of mounting bracket. Insert mounting screws through these holes only.*

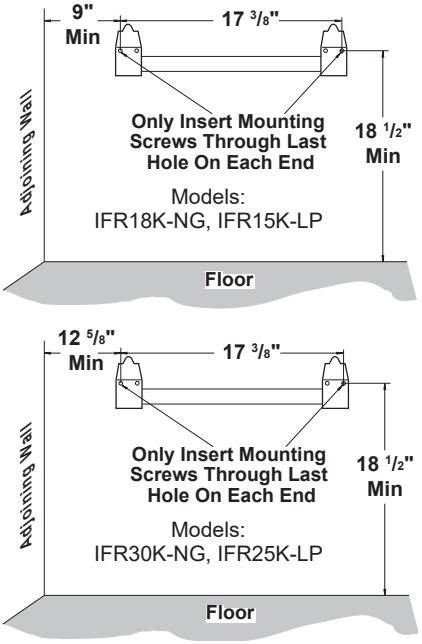

Figure 8 - Mounting Bracket Clearances

3. Remove tape and mounting bracket from wall.

Attaching Mounting Bracket To Wall

Note: Wall anchors, mounting screws, and spacers are in hardware package. The hardware package is provided with heater.

Attaching to Wall Stud Method

For attaching mounting bracket to wall studs:

1. Drill holes at marked locations using 9/64" drill bit.
2. Place mounting bracket onto wall. Line up last hole on each end of bracket with holes drilled in wall.
3. Insert mounting screws through bracket and into wall studs.
4. Tighten screws until mounting bracket is firmly fastened to wall studs.

Attaching to Wall Anchor Method

For attaching mounting bracket to hollow walls (wall areas between studs) or solid walls (concrete or masonry):

1. Drill holes at marked locations using 5/16" drill bit. For solid walls (concrete or masonry), drill at least 1" deep.
2. Fold wall anchor as shown in Figure 9.

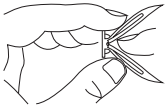

Figure 9 - Folding Anchor

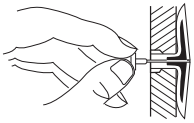

Figure 10 - Popping Open Anchor Wings For Thin Walls

3. Insert wall anchor (wings first) into hole. Tap anchor flush to wall.
4. For thin walls (1/2" or less), insert red key into wall anchor. Push red key to “pop” open anchor wings (see Figure 10).

IMPORTANT: Do not hammer anchor key!

For thick walls (over 1/2" thick) or solid walls, do not pop open wings.

5. Place mounting bracket onto wall. Line up last hole on each end of bracket with wall anchors.
6. Insert mounting screws through bracket and into wall anchors.
7. Tighten screws until mounting bracket is firmly fastened to wall.

Placing Heater On Mounting Bracket

1. Locate two horizontal slots on back panel of heater (see Figure 11).
2. Place heater onto mounting bracket. Slide horizontal slots onto stand-out tabs on mounting bracket.

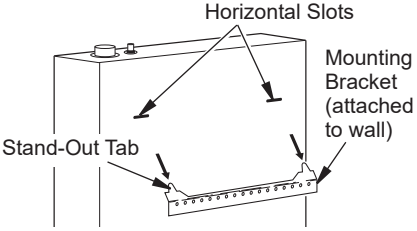

Figure 11 - Mounting Heater Onto Mounting Bracket

Installing Bottom Mounting Bracket

1. Install bottom bracket to heater bottom with two screws. It may be more convenient to remove heater from wall bracket to attach.
2. Place heater on wall mounting bracket.
3. Mark screw locations on wall.
4. Remove heater from mounting bracket.
5. If installing bottom mounting screws into hollow or solid wall, install wall anchors. Follow steps 1 through 4 under *Attaching To Wall Anchor Method*. If installing bottom mounting screw into wall stud, drill holes at marked locations using 9/64" drill bit.
6. Replace heater onto mounting bracket.
7. Place spacers between bottom mounting holes and wall anchor or drilled hole.
8. Hold spacer in place with one hand. With other hand, insert mounting screw though bottom mounting hole and spacer. Place tip of screw in opening of wall anchor or drilled hole.
9. Tighten both screws until heater is firmly secured to wall. Do not overtighten.

Note: Do not replace front panel at this time. Replace front panel after making gas connections and checking for leaks.

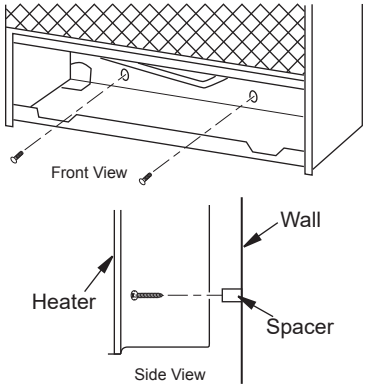

Figure 12 - Installing Bottom Mounting Screws

INSTALLATION OF BASE STAND
(If Used)

Before installing heater to base, please make sure you have a hardware packet that contains the following items:

Base Feet - 2 qty.

Sheet Metal Screws - 4 qty.

Directions:

1. Carefully lay heater on its back on a table with the bottom of the heater extending outside the table edge.
2. Attach base feet to heater using sheet metal screws.

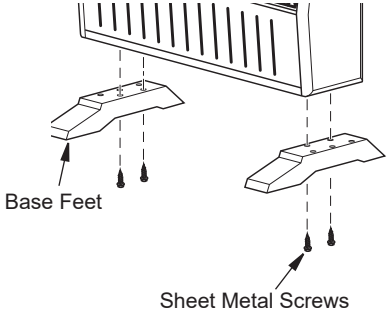

Figure 13 - Installing Base Feet

CONNECTING TO GAS SUPPLY

⚠ WARNING: A qualified service technician must connect heater to gas supply. Follow all local codes.

⚠ WARNING: This appliance requires a 3/8" NPT (National Pipe Thread) inlet connection to the pressure regulator.

⚠ WARNING: Do not overtighten gas connections.

⚠ CAUTION: Use only new, black iron or steel pipe. Internally tinned copper tubing may be used in certain areas. Check your local codes. Use pipe of 1/2" diameter or greater to allow proper gas volume to heater. If pipe is too small, undue loss of pressure will occur.

⚠ CAUTION: Never connect heater directly to the gas supply. This heater requires an external regulator (not supplied). Install the external regulator between the heater and gas supply. The installer provides the external regulator for propane gas.

⚠ CAUTION: Avoid damage to regulator. Hold gas regulator with wrench when connecting into gas piping and/or fittings.

⚠ CAUTION: Use pipe joint sealant that is resistant to propane and natural gas.

Before installing heater, make sure you have the items listed below:

- external regulator for propane unit only (supplied by installer)
- piping (check local codes)
- sealant (resistant to natural gas and propane gas)
- equipment shutoff valve*
- test gauge connection*
- sediment trap
- tee joint
- pipe wrench
- flexible gas hose (check local codes)

* A CSA design-certified equipment shutoff valve with 1/8” NPT tap is an acceptable alternative to test gauge connection. Purchase the optional CSA design certified equipment shutoff valve from your dealer.

Typical Inlet Pipe Diameters

Models up to 20,000 BTU/hr use 3/8" black iron pipe or greater. Models 25,000 BTU/hr and higher use 1/2" black iron pipe or greater. Installation must include an equipment shutoff valve, union, and plugged 1/8" NPT tap. Locate NPT tap within reach for test gauge hook up. NPT tap must be upstream from heater (see Figure 14).

IMPORTANT: Install an equipment shutoff valve in an accessible location. The equipment shutoff valve is for turning on or shutting off the gas to the appliance.

Apply pipe joint sealant lightly to male threads. This will prevent excess sealant from going into pipe. Excess sealant in pipe could result in clogged heater valves.

The installer must supply an external regulator. The external regulator will reduce incoming gas pressure. You must reduce incoming gas pressure to between 11" and 14" of water. If you do not reduce incoming gas pressure, heater regulator damage could occur. Install external regulator with the vent pointing down as shown in Figure 15. Pointing the vent down protects it from freezing rain or sleet.

Install sediment trap in supply line as shown in Figure 14. Place sediment trap where it is within reach for cleaning. Place sediment trap where trapped matter is not likely to freeze. A sediment trap traps moisture and contaminants. This keeps them from going into heater controls. If sediment trap is not installed or is installed wrong, heater may not run properly.

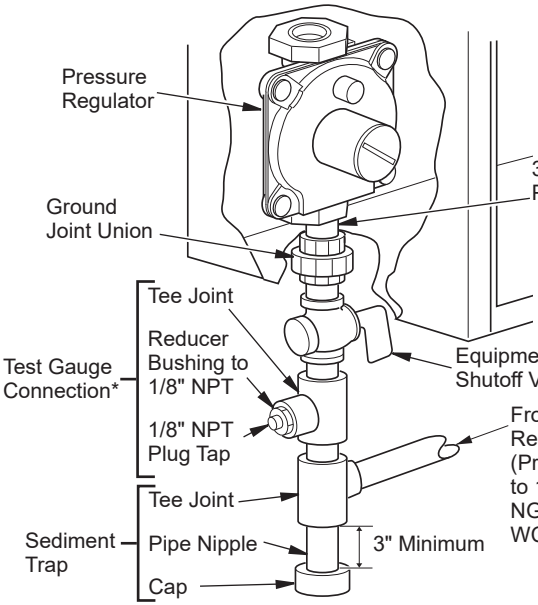

Figure 14 - Gas Connection

* Purchase the optional CSA design-certified equipment shutoff valve from your dealer.

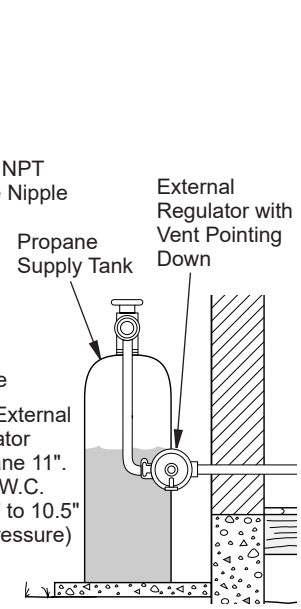

Figure 15 - External Regulator with Vent Pointing Down

CHECKING GAS CONNECTIONS

⚠ WARNING: Test all gas piping and connections for leaks after installing or servicing. Correct all leaks at once.

⚠ WARNING: Never use an open flame to check for a leak. Apply a noncorrosive leak detection fluid to all joints. If bubbles form, there is a leak. Correct all leaks at once.

PRESSURE TESTING GAS SUPPLY PIPING SYSTEM

Test Pressures In Excess Of 1/2 PSIG (3.5 kPa)

1. Disconnect heater with its appliance main gas valve (control valve) and equipment shutoff valve from gas supply piping system. Pressures in excess of 1/2 PSIG will damage heater regulator.
2. Cap off open end of gas pipe where equipment shutoff valve was connected.
3. Pressurize supply piping system by either opening propane supply tank valve or using compressed air.
4. Check all joints of gas supply piping system. Apply a noncorrosive leak detection fluid to all joints. If bubbles form, there may be a leak.
5. Correct all leaks at once.
6. Reconnect heater and equipment shutoff valve to gas supply. Check reconnected fittings for leaks.

Test Pressures Equal To or Less Than 1/2 PSIG (3.5 kPa)

1. Close equipment shutoff valve (see Figure 16).
2. Pressurize supply piping system by either opening propane supply tank valve or using compressed air.
3. Check all joints from propane tank to equipment shutoff valve (see Figure 17). Apply a noncorrosive leak detection fluid to all joints. If bubbles form, there is a leak.
4. Correct all leaks at once.

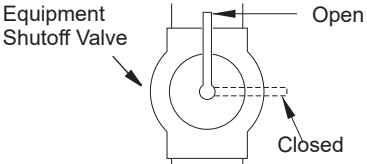

Figure 16 - Equipment Shutoff Valve

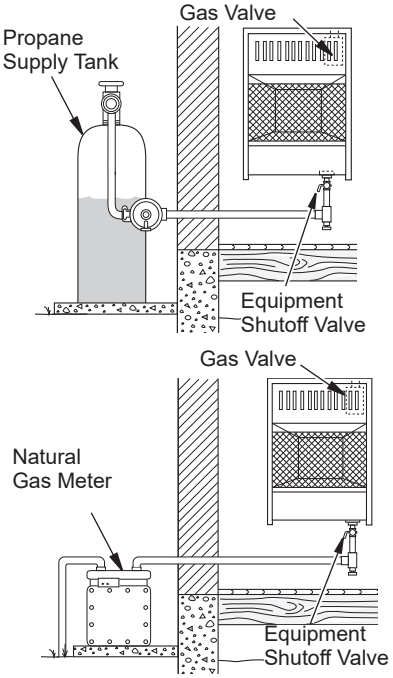

Figure 17 - Fuel Supply

PRESSURE TESTING HEATER GAS CONNECTIONS

1. Open equipment shutoff valve (see Figure 16).
2. Open propane supply tank valve.
3. Make sure control knob of heater is in the OFF position.
4. Check all joints from equipment shutoff valve to control valve (see Figure 17). Apply a noncorrosive leak detection fluid to all joints. Bubbles forming show a leak.
5. Correct all leaks at once.
6. Light heater (see *Operation*, page 16). Check all other internal joints for leaks.
7. Turn off heater (see *Shutting off heater*, page 17).
8. Replace lower front panel.

FOR YOUR SAFETY READ BEFORE LIGHTING

⚠ WARNING: If you do not follow these instructions exactly, a fire or explosion may result causing property damage, personal injury or loss of life.

A. This appliance has a pilot which must be lighted by hand. When lighting the pilot, follow these instructions exactly.

B. BEFORE LIGHTING smell all around the appliance area for gas. Be sure to smell next to the floor because some gas is heavier than air and will settle on the floor.

WHAT TO DO IF YOU SMELL GAS:

- **Do not try to light any appliance.**
- **Do not touch any electric switch; do not use any phone in your building.**
- **Immediately call your gas supplier from a neighbor's phone. Follow the gas supplier's instructions.**
- **If you cannot reach your gas supplier, call the fire department.**

C. Use only your hand to push in or turn the gas control knob. Never use tools. If the knob will not push in or turn by hand, don't try to repair it, call a qualified service technician. Force or attempted repair may result in a fire or explosion.

D. Do not use this appliance if any part has been under water. Immediately call a qualified service technician to inspect the appliance and to replace any part of the control system and any gas control which has been under water.

LIGHTING INSTRUCTIONS

1. STOP! Read the safety information above.
2. Make sure equipment shutoff valve is fully open.
3. Turn control knob clockwise to the OFF position.
4. Wait five (5) minutes to clear out any air. Then smell for gas, including near the floor. If you smell gas, STOP! Follow "B" in the safety information, page 16. If you do not smell gas, go to the next step.
5. Turn control knob counterclockwise to the PILOT position. Press in control knob for five (5) seconds (see Figure 18). *Note: The first time that the heater is operated after connecting the gas supply,the control knob should be pressed for about thirty (30) seconds. This will allow air to bleed from the gas system. If pilot does not stay lit, refer to Troubleshooting, pages 20 through 22. Also contact a qualified service technician or gas supplier for repairs. Until repairs are made, light pilot with match.*

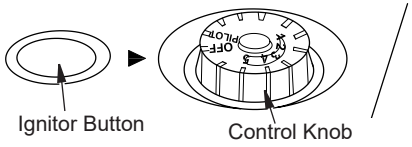

Figure 18 - Control Knob in the OFF Position

- If control knob does not pop up when released, contact a qualified service technician or gas supplier for repairs.

6. With control knob pressed in, push down and release ignitor button. This will light pilot. The pilot is attached to the front of burner. The pilot can be seen through the grill. If needed, keep pressing ignitor button until pilot lights. *Note: If pilot does not stay lit, refer to Troubleshooting, pages 20 through 22. Also contact a qualified service technician or gas supplier for repairs. Until repairs are made, light pilot with match. To light pilot with match, see Manual Lighting Procedure*, page 17.
7. Keep control knob pressed in for 30 seconds after lighting pilot. After 30 seconds, release control knob. If control knob does not pop up when released, contact a qualified service technician or gas supplier for repairs.
   Note: If pilot goes out, repeat steps 3 through 7. This heater has a safety interlock system. Wait one (1) minute before lighting pilot again.
8. Turn control knob counterclockwise to desired heating level. The main burner should light. Set control knob to any heat level between HI and LO.

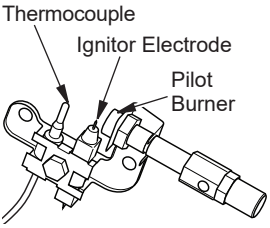

Figure 19 - Pilot

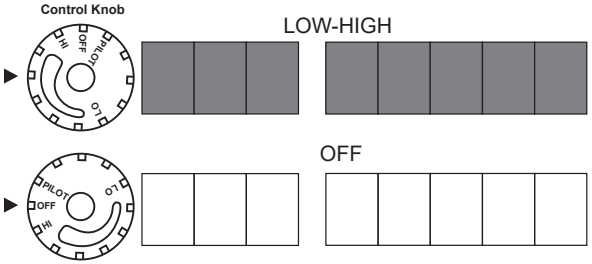

Figure 20- Burner Patterns

THERMOSTAT CONTROL OPERATION

The thermostatic control used on this model differs from standard thermostats. You set standard thermostats to a specific temperature such as 72° F. The control of this heater establishes a "comfort level". In order for the thermostat to operate effectively, the heater should be the main source of heat in the room. Follow the instructions for lighting the heater on page 16. When the room reaches the desired comfort level, rotate the control knob clockwise slowly until the main burner turns off and the pilot remains on (this position on the knob will change depending on room temperature).

Turn the knob counter-clockwise slowly until the main burner reignites. Note the position of the control knob by the numbers printed on the knob. Leave the knob in this position.

As the room temperature increases, the main burner will turn off and the pilot will remain on. When the room temperature cools, the heater's main burner will come back on. If left at this set point the thermostat will turn the main burner on or off as needed to maintain the room temperature at the desired comfort level.

Note: The thermostat sensing bulb reacts to the temperature depending on house's construction.

⚠ CAUTION: Do not try to adjust heating levels by using the equipment shutoff valve.

TO TURN OFF GAS TO APPLIANCE

Shutting Off Heater

Turn control knob clockwise ↷ to the OFF position.

Shutting Off Burner Only (pilot stays lit)
Turn control knob clockwise ↷ to the PILOT position.

MANUAL LIGHTING PROCEDURE

1. Remove lower front panel.
2. Follow steps 1 through 5 under *Lighting Instructions*, page 16.
3. With control knob pressed in, strike match. Hold match to pilot until pilot lights.
4. Keep control knob pressed in for 30 seconds after lighting pilot. After 30 seconds, release control knob. Follow step 8 under *Lighting Instructions*, page 16.
5. Replace lower front panel.

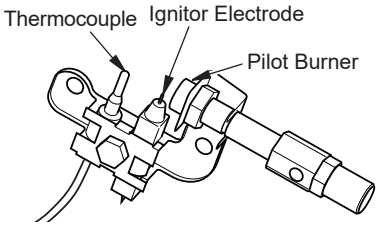

Figure 21 - Pilot Assembly

INSPECTING HEATER

IMPORTANT: Owners should check pilot flame pattern and burner flame pattern often. Incorrect flame patterns indicate the need for cleaning (see Care and Maintenance, page 19) or service.

⚠ WARNING: Only a qualified service person should service and repair heater. This includes maintenance requiring replacement or alteration of components.

PILOT FLAME PATTERN

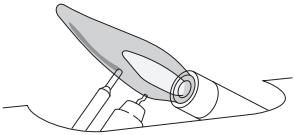

Figure 22 - Correct Pilot Flame Pattern

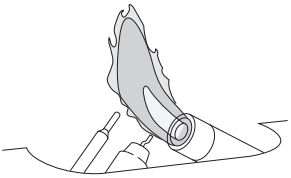

Figure 23 - Incorrect Pilot Flame Pattern

Figure 22 shows a correct pilot flame pattern. Figure 23 shows an incorrect pilot flame pattern. The incorrect pilot flame is not touching the thermocouple. This will cause the thermocouple to cool, which shuts the heater off.

If pilot flame pattern is incorrect, as shown in Figure 23:

- turn heater off (see *To Turn Off Gas to Appliance*, page 17).
- see *Troubleshooting* pages 20 through 22.

BURNER FLAME PATTERN

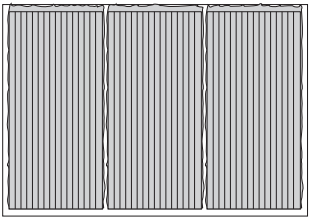

Figure 24 - Correct Burner Flame Pattern

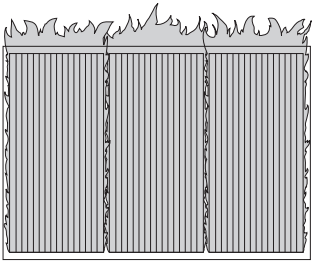

Figure 25 - Incorrect Burner Flame Pattern

Figure 24 shows a correct burner flame pattern. Figure 25 shows an incorrect burner flame pattern. The incorrect burner flame pattern shows yellow tipping of the flame. It also shows the flame higher than 1/2 the heat shield height.

⚠ WARNING: If yellow tipping occurs, your heater could produce increased levels of carbon monoxide. If the burner flame pattern shows yellow tipping, follow instructions below.

If burner flame pattern is incorrect, as shown in Figure 25:

- turn heater off (see *To Turn Off Gas to Appliance*, page 17).
- see *Troubleshooting* pages 20 through 22.

Notice: *Do not mistake orange flames with yellow tipping. Dirt or other fine particles enter the heater and burn causing brief patches of orange flame.*

⚠ WARNING: Turn off heater and let cool before servicing.

⚠ CAUTION: You must keep control areas, burner, and circulating air passageways of heater clean. Inspect these areas of heater before each use. Have heater inspected yearly by a qualified service technician. Heater may need more frequent cleaning due to excessive lint from carpeting, bedding material, pet hair, etc.

⚠ WARNING: Failure to keep the primary air opening(s) of the burner(s) clean may result in sooting and property damage.

ODS/PILOT AND BURNER

Use a vacuum cleaner, pressurized air, or a small, soft bristled brush to clean.

BURNER PILOT AIR INLET

The primary air inlet hole allows the proper amount of air to mix with the gas. This provides a clean burning flame. Keep this hole clear of dust, dirt and lint. Clean this air inlet hole prior to each heating season. A blocked air hole will create soot. We recommend that you clean the unit every three months during operation and have heater inspected yearly by a qualified service person.

We also recommend that you keep the burner tube and pilot assembly clean and free of dust and dirt. To clean these parts we recommend using compressed air no greater than 30 PSI. Your local computer store, hardware store, or home center may carry compressed air in a can. You can use a vacuum cleaner in the blow position. If using compressed air in a can, please follow the directions on the can. If you don't follow directions on the can, you could damage the pilot assembly.

1. Shut off the unit, including the pilot. Allow the unit to cool for at least thirty minutes.
2. Inspect burner and pilot for dust and dirt.
3. Blow air across the ports/slots and holes in the burner.
4. Never insert objects into the pilot tube.

Clean the pilot assembly also. A yellow tip on the pilot flame indicates dust and dirt in the pilot assembly. There is a small pilot air inlet about 2" from where the pilot flame comes out of the pilot assembly (see Figure 26). With the unit off, lightly blow air through the air inlet. You may blow through a drinking straw if compressed air is not available.

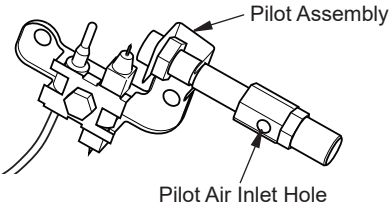

Figure 26 - Pilot Inlet Air Hole

CABINET

Air Passageways

Use pressurized air to clean.

Exterior

Use a soft cloth dampened with a mild soap and water mixture. Wipe the cabinet to remove dust.

TROUBLESHOOTING

⚠ WARNING: If you smell gas:
- **Shut off gas supply.**
- **Do not try to light any appliance.**
- **Do not touch any electrical switch; do not use any phone in your building.**
- **Immediately call your gas supplier from a neighbor's phone. Follow the gas supplier's instructions.**
- **If you cannot reach your gas supplier, call the fire department.**

⚠ WARNING: Only a qualified service technician should service and repair heater. Make sure that power is turned off before proceeding. Turn off and let cool before servicing.

⚠ CAUTION: Never use a wire, needle, or similar object to clean ODS/pilot. This can damage ODS/ pilot unit.

IMPORTANT: Operating heater where impurities in air exist may create odors. Cleaning supplies, paint, paint remover, cigarette smoke, cements and glues, new carpet or textiles, etc., create fumes. These fumes may mix with combustion air and create odors.

Note: All troubleshooting items are listed in order of operation.

Problem	Possible Cause	Corrective Action
When ignitor button is pressed in, there is no spark at ODS/pilot.	1. Ignitor electrode is positioned wrong. Ignitor electrode is broken. 2. Ignitor electrode is not connected to ignitor cable. 3. Ignitor cable is pinched or wet. 4 Broken ignitor cable. 5. Bad piezo ignitor.	1. Replace pilot assembly. 2. Replace ignitor cable. 3. Free ignitor cable if pinched by any metal or tubing. Keep ignitor cable dry. 4. Replace ignitor cable. 5. Replace piezo ignitor.
When ignitor button is pressed in there is a spark at ODS/pilot but no ignition.	1. Gas supply is turned off or equipment shutoff valve is closed. 2. Control knob not fully pressed in while pressing ignitor button. 3. Air in gas lines when installed. 4. ODS / pilot is clogged. 5. Incorrect inlet gas pressure or inlet regulator is damaged. 6. Control knob not in PILOT position. 7. Depleted gas supply (propane).	1. Turn on gas supply or open equipment shutoff valve. 2. Fully press in control knob while pressing ignitor button. 3. Continue holding down control knob. Repeat igniting operation until air is removed. 4. Clean ODS/pilot (see *Care and Maintenance*, page 19) or replace ODS/pilot assembly. 5. Check inlet gas pressure or replace inlet gas regulator. 6. Turn control knob to PILOT position. 7. Contact gas supplier.

TROUBLESHOOTING

Problem	Possible Cause	Corrective Action
ODS/pilot lights but flame goes out when control knob is released.	1. Control knob is not fully pressed in. 2. Control knob is not pressed in long enough. 3. Equipment shutoff valve is not fully open. 4. Thermocouple connection is loose at control valve. 5. Pilot flame not touching thermocouple, which allows thermocouple to cool, causing pilot flame to go out. This problem could be caused by one or both of the following: A) Low gas pressure B) Dirty or partially clogged ODS/pilot 6. Thermocouple damaged. 7. Control valve damaged.	1. Press in control knob fully. 2. After ODS/pilot lights, keep control knob pressed in 30 seconds. 3. Fully open equipment shutoff valve. 4. Hand tighten until snug, and then tighten 1/4 turn more. 5. A) Contact local natural or propane gas company B) Clean ODS/pilot (see *Care and Maintenance*, page 19) or replace ODS/pilot assembly 6. Replace thermocouple. 7. Replace control valve.
Burner(s) does not light after ODS/pilot is lit.	1. Burner orifice is clogged. 2. Burner orifice diameter is too small. 3. Inlet gas pressure is too low.	1. Clean burner orifice (see *Care and Maintenance*, page 19) or replace burner orifice. 2. Replace burner orifice. 3. Contact local gas supplier.
Delayed ignition of burner(s).	1. Manifold pressure is too low. 2. Burner orifice is clogged.	1. Contact local gas supplier. 2. Clean burner (see *Care and Maintenance*, page 19) or replace burner orifice.
Burner backfiring during combustion.	1. Burner orifice is clogged or damaged. 2. Burner is damaged. 3. Gas regulator is damaged.	1. Clean burner orifice (see *Care and Maintenance*, page 19) or replace burner orifice. 2. Replace burner. 3. Replace gas regulator.
Burner plaque(s) does not glow.	1. Plaque is damaged. 2. Inlet gas pressure is too low. 3. Control knob set between locked positions.	1. Replace burner. 2. Contact local gas company. 3. Turn control knob until it locks at desired setting.
Gas odor during combustion.	1. Foreign matter between control valve and burner. 2. Gas leak. (See *Warning Statement* at top of page 20).	1. Take apart gas tubing and remove foreign matter. 2. Locate and correct all leaks (see *Checking Gas Connections*, page 15).

TROUBLESHOOTING

Problem	Possible Cause	Corrective Action
Slight smoke or odor during initial operation.	1. Residues from manufacturing process.	1. Problem will stop after a few hours of operation.
Heater produces a clicking/ticking noise just after burner is lit or shut off.	1. Metal is expanding while heating or contracting while cooling.	1. This is common with most heaters. If noise is excessive, contact qualified service technician.
White powder residue forming within burner box or on adjacent walls or furniture.	1. When heated, the vapors from furniture polish, wax, carpet cleaners, etc., turn into white powder residue.	1. Turn heater off when using furniture polish, wax, carpet cleaner or similar products.
Heater produces unwanted odors.	1. Heater is burning vapors from paint, hair spray, glues, etc. See IMPORTANT statement, page 21. 2. Gas leak. See *Warning Statement* at the top of page 20. 3. Low fuel supply (propane gas only).	1. Ventilate room. Stop using odor causing products while heater is running. 2. Locate and correct all leaks (see *Checking Gas Connections*, page 15). 3. Refill supply tank (Propane models).
Heater shuts off in use (ODS operates).	1. Not enough fresh air is available. 2. Low line pressure. 3. ODS/pilot is partially clogged.	1. Open window and/or door for ventilation. 2. Contact local gas supplier. 3. Clean ODS/pilot (see *Care and Maintenance*, page 19).
Gas odor exists even when control knob is in OFF position.	1. Gas leak. See *Warning Statement* at top of page 20. 2. Control valve is defective.	1. Locate and correct all leaks (see *Checking Gas Connections*, page 15). 2. Replace control valve.
Moisture/condensation noticed on windows.	1. Not enough combustion/ventilation air.	1. Refer to *Air for Combustion and Ventilation* requirements, page 7.

MODEL IFR18K-NG / IFR15K-LP

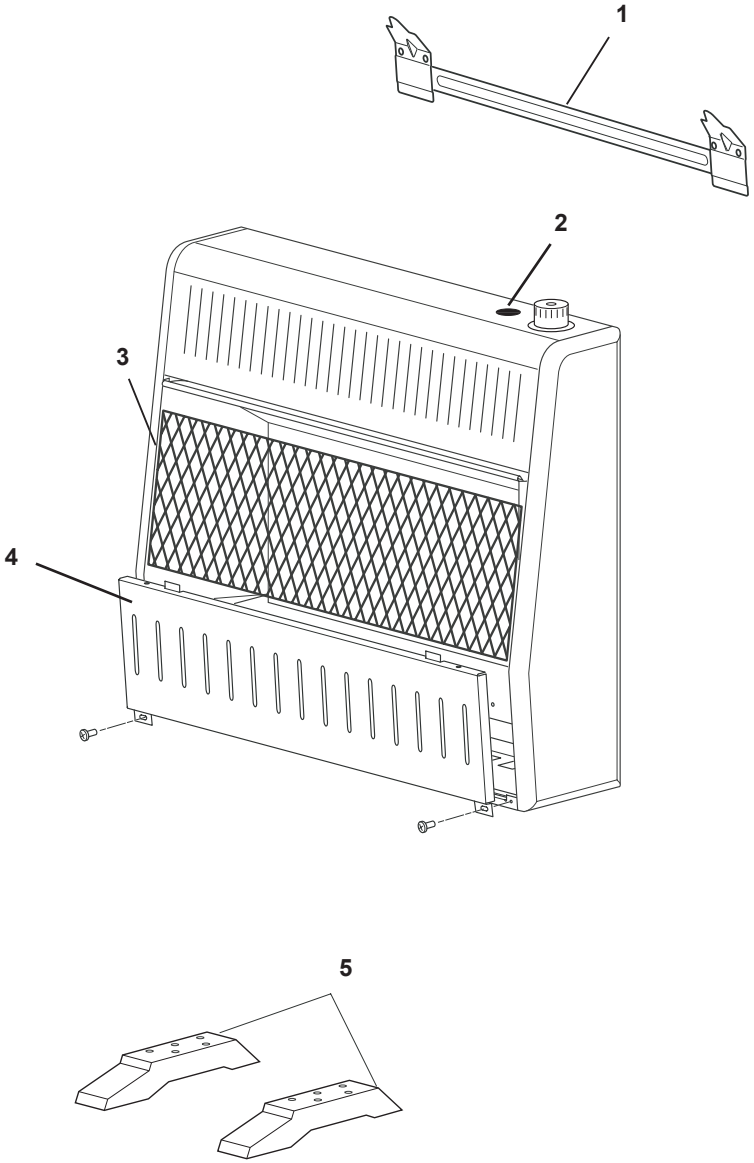

PARTS

MODEL IFR18K-NG / IFR15K-LP

This list contains replaceable parts for your heater. When ordering replacement parts, follow the instructions listed under *Replacement Parts* on page 27 of this manual.

ITEM	PART #	DESCRIPTION	QTY
1	MB060-01	Mounting Bracket	1
2	ML083-03	Piezo Ignitor	1
3	MB29002	Grill Guard	1
4	ML153-02-RW	Lower Front Panel	1
5	PF09B-RW	Base Assembly	
PART AVAILABLE - NOT SHOWN			
	161607-01	Hardware Package	1

MODEL IFR30K-NG / IFR25K-LP

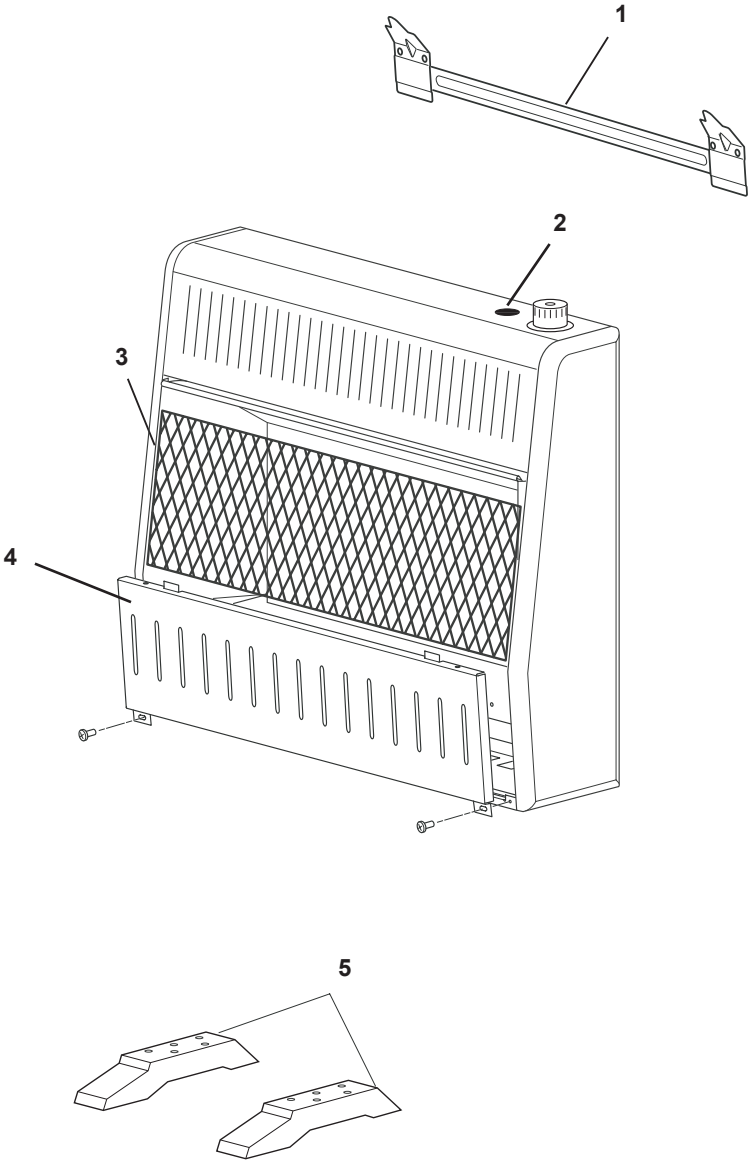

PARTS

MODEL IFR30K-NG / IFR25K-LP

This list contains replaceable parts for your heater. When ordering replacement parts, follow the instructions listed under *Replacement Parts* on page 27 of this manual.

ITEM	PART #	DESCRIPTION	QTY
1	MB060-01	Mounting Bracket	1
2	ML083-03	Piezo Ignitor	1
3	MB29001	Grill Guard	1
4	ML153-01-RW	Lower Front Panel	1
5	PF09B-RW	Base Assembly	
PART AVAILABLE - NOT SHOWN			
	161607-01	Hardware Package	1

REPLACEMENT PARTS

Note: Use only original replacement parts. This will protect your warranty coverage for parts replaced under warranty.

PARTS UNDER WARRANTY

Contact authorized dealers of this product. If they can't supply original replacement parts, call Customer Care at 828-765-6144 for referral information.

When contacting Customer Service or your dealer, please provide:

- Your name
- Your address
- Model and serial number of your heater
- How heater was malfunctioning
- Type of gas used (Propane or Natural gas)
- Purchase date

Usually, we will ask you to return the defective part to the factory.

PARTS NOT UNDER WARRANTY

Contact authorized dealers of this product. If they can't supply original replacement parts, call Customer Care at 828-765-6144 for referral information.

When calling Customer Service have ready:

- Model number of your heater
- The replacement part number

SERVICE HINTS

When Gas Pressure Is Too Low

- pilot will not stay lit
- burners will have delayed ignition
- fireplace will not produce specified heat
- propane gas supply might be low (propane units only)

You may feel your gas pressure is too low. If so, contact your local gas supplier.

TECHNICAL SERVICE

You may have further questions about installation, operation, or troubleshooting. If so, contact Customer Care at 828-765-6144.

ACCESSORIES

Purchase these heating accessories, please visit our website **www.buckstove.com** or give us a call at 828-765-6144.

OPTIONAL FAN KIT

Model # Optional fan kit. The fan has 3 settings ON/OFF/Auto. Please refer to PF06-YJLF-B instructions.

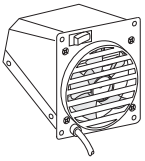

WARRANTY

KEEP THIS WARRANTY

VENT-FREE INFRARED HEATERS

Always specify model and serial numbers when communicating with customer service.

New Buck Corporation warrants this product to be free from defects in materials and components for two (2) year from the date of first purchase provided that the product has been properly installed, operated and maintained in accordance with all applicable instructions. To make a claim under this warranty the Bill of Sale or Cancelled check must be presented.

This warranty is extended only to the original retail purchaser. This warranty covers the cost of part(s) required to restore this heater to proper operating condition and an allowance for labor when provided by a New Buck Corp. dealer. Warranty part (s) MUST be obtained through authorized dealers of this product and / or New Buck Corp. who will provide original factory replacement parts. Failure to use original factory replacement parts voids this warranty. The heater MUST be installed by a qualified installer in accordance with all local codes and instructions furnished with the unit.

This warranty does not apply to parts that are not in original condition because of normal wear and tear, or parts that fail or become damaged as a result of misuse, accidents, lack of proper maintenance or defects caused by improper installation. Travel diagnostic cost, labor, transportation and any and all such other costs related to repairing a defective heater will be the responsibility of the owner.

For a period of one (1) year from the date of purchase, New Buck Corp. will replace or repair at its option: electrical motor, wiring, switches and optional accessories.

TO THE FULL EXTENT ALLOWED BY LAW OF THE JURISDICTION THAT GOVERNS THE SALE OF THE PRODUCT: THIS EXPRESS WARRANTY EXCLUDES ANY AND ALL OTHER EXPRESSED WARRANTIES AND LIMITS THE DURATION OF ANY AND ALL IMPLIED WARRANTIES, INCLUDING WARRANTIES OF MERCHANTABILITY AND FITNESS FOR A PARTICULAR PURPOSE TO TWO (2) YEARS ON ALL COMPONENTS FROM THE DATE OF PURCHASE: AND NEW BUCK CORPORATION LIABILITY IS HEREBY LIMITED TO THE PURCHASE PRICE OF THE PRODUCT AND NEW BUCK CORPORATION SHALL NOT BE LIABLE FOR ANY OTHER DAMAGES WHATSOEVER INCLUDING INDIRECT, INCIDENTAL OR CONSEQUENTIAL DAMAGES.

Some states do not allow a limitation on how long an implied warranty lasts or an exclusion or limitation of incidental or consequential damages, so the above limitation on implied warranties or exclusion or limitation on damages may not apply to you. This warranty gives you specific legal rights and you may also have other rights that vary from state to state.

For information about this warranty write: NEW BUCK CORPORATION P.O. BOX 69 SPRUCE PINE, NC 28777

The attached owner registration card must be completed in its entirety and mailed within 30 days from date of installation in order for warranty coverage to begin to:

PLEASE NOTE: Owner Registration Card must contain Authorized Buck Stove Dealer Number and Certified Installer's number (if applicable) for warranty coverage to begin.

NAME: _____

ADDRESS: _____

CITY: _____

STATE: _____ ZIP: _____

CUSTOMER EMAIL: _____

MODEL#: _____

SERIAL#: _____

DATE OF PURCHASE: _____

DATE OF INSTALLATION: _____

INSTALLER'S NAME: _____

PURCHASED FROM: _____

BUCKSTOVE
Unmatched American Quality

New Buck Corporation
200 Ethan Allen Drive
Spruce Pine, NC 28777
info@buckstove.com

200045-02
Rev. B
02/24