ACiQ

18K R32 PORTABLE/MINI POOL HEAT PUMP

INSTALLATION & OWNER'S MANUAL

Models Covered:
PHP-PA-18-115

WARNING: <u>DO NOT destroy or lose this manual.</u> Please read the manual thoroughly. Also, store the manual in a place that allows for easy retrieval and future reference. As a result of continuous product improvement, the specification and design of this product are subject to change without advanced notice. Consult your manufacturer or your dealer for further details regarding this product. The images and illustrations within this this manual are for reference only. The actual shape and size of your product may vary.

VERSION DATE: 9-30-26

WARNING

The pool heat pump employ the flammable refrigerant R32. So, transportation, marking and storage of the units should follow the below requirements.

1. **General**

   The following information is provided for units that employ FLAMMABLE REFRIGERANT.

2. **Transport of equipment containing flammable refrigerants**

   Attention is drawn to the fact that additional transportation regulations may exist with respect to equipment containing flammable gas. The maximum number of pieces of equipment or the configuration of the equipment permitted to be transported together will be determined by the applicable transport regulations.

3. **Marking of equipment using signs**

   Signs for similar appliances used in a work area are generally addressed by local regulations and give the minimum requirements for the provision of safety and/or health signs for a work location.

   All required signs are to be maintained and employers should ensure that employees receive suitable and sufficient instruction and training on the meaning of appropriate safety signs and the actions that need to be taken in connection with these signs.

   The effectiveness of signs should not be diminished by too many signs being placed together.

   Any pictograms used should be as simple as possible and contain only essential details.

4. **Disposal of equipment using flammable refrigerants**

   Please see national regulations.

5. **Storage of equipment/appliances**

   The storage of the appliance should be in accordance with the applicable regulations or instructions, whichever is more stringent.

6. **Storage of packed (unsold) equipment**

   Storage package protection should be constructed in such a way that mechanical damage to the equipment inside the package will not cause a leak of the REFRIGERANT CHARGE.

   The maximum number of pieces of equipment permitted to be stored together will be determined by local regulations.

WARNING

- Do not use means to accelerate the defrosting process or to clean, other than those recommended by the manufacturer.
- The appliance shall be stored in a room without continuously operating ignition sources, for example:
  open flames, an operating gas appliance or an operating electric heater.
  Do not pierce or burn.
  Be aware that refrigerants may not contain an odour.

Refrigerant
Safety Group
A2L

CONTENT

1. SAFETY INFORMATION ---------- 1

2. PACKING LIST ---------- 12

3. PREPARING FOR USE ---------- 13

4. STARTUP AND SETTINGS ---------- 16

5. TROUBLESHOOTING ---------- 19

6. MAINTENANCE ---------- 20

7. ENVIRONMENT ---------- 21

READ THIS MANUAL CAREFULLY BEFORE STARTING UP THE UNIT. DO NOT THROW IT AWAY. KEEP IT IN YOUR FILES FOR FUTURE REFERENCE.

BEFORE OPERATING THE UNIT, MAKE SURE THE INSTALLATION HAS BEEN CARRIED OUT CORRECTLY BY A PROFESSIONAL DEALER. IF YOU FEEL UNSURE ABOUT OPERATION, CONTACT YOUR DEALER FOR ADVICE AND INFORMATION.

Recommended Pool Capacity Range*	
Model	**Pool Capacity (Gallons)**
18K	2113 - 2642 gal
***Recommended to use an isothermal cover at night**	

1. SAFETY INFORMATION

- This appliance is not intended for use by persons (including children) with reduced physical, sensory or mental capabilities, or lack of experience and knowledge, unless they have been given supervision or instruction concerning use of the appliance by a person responsible for their safety.

- Children should be supervised to ensure that they do not play with the appliance.

- If the SUPPLY CORD is damaged, it must be replaced by the manufacturer, its service agent or similarly qualified persons in order to avoid a hazard.

- That the appliance shall be installed in accordance with national wiring regulations.

- The applicable operating temperature range for this unit is 50.0ºF - 109.4ºF.

- Please always keep the unit upright. Once the unit has been tiled or put on its side, please wait 24 hours before starting the heat pump unit.

- Put the unit on a flat and solid base.

- Do not throw the heat pump unit.

- The heat pump shall be installed outdoors. However, steps should be taken to protect the power cord, plug, and electrical socket from getting wet or damaged.

- If the heat pump is damaged when open the package, it must be replaced, please contact your service center or similarly qualified persons in order to avoid a hazard.

- Before connect the heat pump unit, please check whether the voltage indicated on the RCD of the heat pump unit corresponds to the local main voltage.

- Do not pull the wires and plug of the power supply. Do not wrap the power supply wires around the heat pump.

- Always make sure water pipe connections of pool heat pump are properly locked before start using the unit.

- Please do not insert objects directly into the fan when the heat pump unit is running, as it will cause unit damaged and hurt.

- During using and moving the heat pump unit, do not damage the air side heat-exchanger's fins.

- Disconnect the power supply wires from the socket when the heat pump is not in use and before cleaning.

WARNING

Qualification of workers

The manual shall contain specific information about the required qualification of the working personnel for maintenance, service and repair operations. Every working procedure that affects safety means shall only be carried out by competent persons.
Examples for such working procedures are -

- Breaking into the refrigerating circuit,
- Opening of sealed components,
- Opening of ventilated enclosures.

WARNING

Competence of service personnel

- General
  Information of procedures additional to usual information for refrigerating appliance installation, repair,maintenance and decommission procedures is required when an appliance with FLAMMABLE REFRIGERANT is affected.

  The training of these procedures is carried out by national training organisations or manufacturers that are accredited to teach the relevant national competency standards that may be set in legislation.

  The achieved competence should be documented by a certificate.

■ Information and training

- The training should include the substance of the following:
  - Information about the explosion potential of FLAMMABLE REFRIGERANTS to show that flammables may be dangerous when handled without care.
  - Information about POTENTIAL IGNITION SOURCES, especially those that are not obvious, such as lighters, light switches, vacuum cleaners, electric heaters.

- Information about the different safety concepts:
  - Unventilated-Safety of the appliance does not depend on ventilation of the housing. Switching off the appliance or opening of the housing has no significant effect on the safety. Nevertheless, it is possible that leaking refrigerant may accumulate inside the enclosure and flammable atmosphere will be released when the enclosure is opened.
  - Ventilated enclosure-Safety of the appliance depends on ventilation of the housing. Switching off the appliance or opening of the enclosure has a significant effect on the safety. Care should be taken to ensure sufficient ventilation before.
  - Ventilated room -Safety of the appliance depends on the ventilation of the room. Switching off the appliance or opening of the housing has no significant effect on the safety. The ventilation of the room shall not be switched off during repair procedures.

- Information about refrigerant detectors:
  - Principle of function, including influences on the operation.
  - Procedures, how to repair, check or replace a refrigerant detector or parts of it in a safe way.
  - Procedures, how to disable a refrigerant detector in case of repair work on the refrigerant carrying parts.

- Information about the concept of sealed components and sealed enclosures according to IEC60079-15:2010.

- Information about the correct working procedures:

  a) Commissioning
     - Ensure that the floor area is sufficient for the REFRIGERANT CHARGE or that the ventilation duct is assembled in a correct manner.
     - Connect the pipes and carry out a leak test before charging with refrigerant.
     - Check safety equipment before putting into service.

b) Maintenance

- Portable equipment shall be repaired outside or in a workshop specially equipped for servicing units with FLAMMABLE REFRIGERANTS.
- Ensure sufficient ventilation at the repair place.
- Be aware that malfunction of the equipment may be caused by refrigerant loss and a refrigerant leak is possible.
- Discharge capacitors in a way that won't cause any spark. The standard procedure to short circuit the capacitor terminals usually creates sparks.
- Reassemble sealed enclosures accurately. If seals are worn, replace them.
- Check safety equipment before putting into service.

c) Repair

- Portable equipment shall be repaired outside or in a workshop specially equipped for servicing units with FLAMMABLE REFRIGERANTS.
- Ensure sufficient ventilation at the repair place.
- Be aware that malfunction of the equipment may be caused by refrigerant loss and a refrigerant leak is possible.
- Discharge capacitors in a way that won't cause any spark.
- When brazing is required, the following procedures shall be carried out in the right order:

  Remove the refrigerant. If the recovery is not required by national regulations, drain the refrigerant to the outside. Take care that the drained refrigerant will not cause any danger. In doubt, one person should guard the outlet. Take special care that drained refrigerant will not float back into the building.

  1) Evacuate the refrigerant circuit.
  2) Purge the refrigerant circuit with nitrogen for 5 min (not required for A2L REFRIGERANTS).
  3) Evacuate again (not required for A2L REFRIGERANTS).
  4) Remove parts to be replaced by cutting, not by flame.
  5) Purge the braze point with nitrogen during the brazing procedure.
  6) Carry out a leak test before charging with refrigerant.
- Reassemble sealed enclosures accurately. If seals are worn, replace them.
- Check safety equipment before putting into service.

d) Decommissioning

- If the safety is affected when the equipment is putted out of service, the REFRIGERANT CHARGE shall be removed before decommissioning.
- Ensure sufficient ventilation at the equipment location.

- Be aware that malfunction of the equipment may be caused by refrigerant loss and a refrigerant leak is possible.
- Discharge capacitors in a way that won't cause any spark.
- Remove the refrigerant. If the recovery is not required by national regulations, drain the refrigerant to the outside. Take care that the drained refrigerant will not cause any danger. In doubt,one person should guard the outlet. Take special care that drained refrigerant will not float back into the building.
- When FLAMMABLE REFRIGERANTS except A2L REFRIGERANTS are used,
  1) Evacuate the refrigerant circuit.
  2) Purge the refrigerant circuit with nitrogen for 5 min.
  3) Evacuate again.
  4) Fill with nitrogen up to atmospheric pressure.
  5) Put a label on the equipment that the refrigerant is removed.

e) Disposal
- Ensure sufficient ventilation at the working place.
- Remove the refrigerant. If the recovery is not required by national regulations, drain the refrigerant to the outside. Take care that the drained refrigerant will not cause any danger. In doubt,one person should guard the outlet. Take special care that drained refrigerant will not float back into the building.
- When flammable refrigerants are used,
  1) evacuate the refrigerant circuit.
  2) purge the refrigerant circuit with oxygen free nitrogen.
  3) evacuate again. (not required for A2L refrigerants); and
  4) cut out the compressor and drain the oil.

WARNING

Information on servicing

■ General

The manual shall contain specific information for service personnel according.

■ Checks to the area

Prior to beginning work on systems containing FLAMMABLE REFRIGERANTS, safety checks are necessary to ensure that the risk of ignition is minimised For repair to the REFRIGERATING SYSTEM.

- Work procedure

  Work shall be undertaken under a controlled procedure so as to minimise the risk of a flammable gas or vapour being present while the work is being performed.

- General work area

  All maintenance staff and others working in the local area shall be instructed on the nature of work being carried out. Work in confined spaces shall be avoided.

- Checking for presence of refrigerant

  The area shall be checked with an appropriate refrigerant detector prior to and during work, to ensure the technician is aware of potentially toxic or flammable atmospheres. Ensure that the leak detection equipment being used is suitable for use with all applicable refrigerants, i. e. non-sparking, adequately sealed or intrinsically safe.

- Presence of fire extinguisher

  If any hot work is to be conducted on the refrigerating equipment or any associated parts, appropriate fire extinguishing equipment shall be available to hand. Have a dry powder or CO2 fire extinguisher adjacent to the charging area.

- No ignition sources

  No person carrying out work in relation to a REFRIGERATING SYSTEM which involves exposing any pipe work shall use any sources of ignition in such a manner that it may lead to the risk of fire or explosion. All possible ignition sources, including cigarette smoking, should be kept sufficiently far away from the site of installation, repairing, removing and disposal, during which refrigerant can possibly be released to the surrounding space. Prior to work taking place, the area around the equipment is to be surveyed to make sure that there are no flammable hazards or ignition risks. “No Smoking” signs shall be displayed.

- Ventilated area

  Ensure that the area is in the open or that it is adequately ventilated before breaking into the system or conducting any hot work. A degree of ventilation shall continue during the period that the work is carried out. The ventilation should safely disperse any released refrigerant and preferably expel it externally into the atmosphere.

- Checks to the refrigerating equipment

  Where electrical components are being changed, they shall be fit for the purpose and to the correct specification. At all times the manufacturer’s maintenance and service guidelines shall be followed. If in doubt, consult the manufacturer’s technical department for assistance.

- The following checks shall be applied to installations using FLAMMABLE REFRIGERANTS:
  - the actual REFRIGERANT CHARGE is in accordance with the room size within which the refrigerant containing parts are installed;
    the ventilation machinery and outlets are operating adequately and are not obstructed;
  - if an indirect refrigerating circuit is being used, the secondary circuit shall be checked for the presence of refrigerant;
  - marking to the equipment continues to be visible and legible. Markings and signs that are illegible shall be corrected;
  - refrigerating pipe or components are installed in a position where they are unlikely to be exposed to any substance which may corrode refrigerant containing components, unless the components are constructed of materials which are inherently resistant to being corroded or are suitably protected against being so corroded.

- Checks to electrical devices

  Repair and maintenance to electrical components shall include initial safety checks and component inspection procedures. If a fault exists that could compromise safety, then no electrical supply shall be connected to the circuit until it is satisfactorily dealt with. If the fault cannot be corrected immediately but it is necessary to continue operation, an adequate temporary solution shall be used. This shall be reported to the owner of the equipment so all parties are advised.

  Initial safety checks shall include:
  - that capacitors are discharged: this shall be done in a safe manner to avoid possibility of sparking;
  - that no live electrical components and wiring are exposed while charging, recovering or purging the system;
  - that there is continuity of earth bonding.

- Repairs to sealed components
  - During repairs to sealed components, all electrical supplies shall be disconnected from the equipment being worked upon prior to any removal of sealed covers, etc. If it is absolutely necessary to have an electrical supply to equipment during servicing, then a permanently operating form of leak detection shall be located at the most critical point to warn of a potentially hazardous situation.
  - Sealed electrical components shall be replaced.

- Repair to intrinsically safe components

  Do not apply any permanent inductive or capacitance loads to the circuit without ensuring that this will not exceed the permissible voltage and current permitted for the unit in use.

Intrinsically safe components must be replaced.
Replace components only with parts specified by the manufacturer. Other parts may result in the ignition of refrigerant in the atmosphere from a leak.

■ Cabling

Check that cabling will not be subject to wear, corrosion, excessive pressure, vibration, sharp edges or any other adverse environmental effects. The check shall also take into account the effects of aging or continual vibration from sources such as compressors or fans.

■ Detection of flammable refrigerants

Under no circumstances shall potential sources of ignition be used in the searching for or detection of refrigerant leaks. A halide torch (or any other detector using a naked flame) shall not be used.

The following leak detection methods are deemed acceptable for all refrigerant systems.

- Electronic leak detectors may be used to detect refrigerant leaks but, in the case of FLAMMABLE REFRIGERANTS, the sensitivity may not be adequate, or may need re-calibration. (Detection equipment shall be calibrated in a refrigerant-free area.)
  Ensure that the detector is not a potential source of ignition and is suitable for the refrigerant used. Leak detection equipment shall be set at a percentage of the LFL of the refrigerant and shall be calibrated to the refrigerant employed, and the appropriate percentage of gas (25 % maximum) is confirmed.
- Leak detection fluids are also suitable for use with most refrigerants but the use of detergents containing chlorine shall be avoided as the chlorine may react with the refrigerant and corrode the copper pipe-work.

NOTE: Examples of leak detection fluids are bubble method and fluorescent method agents.

If a leak is suspected, all naked flames shall be removed/extinguished.

If a leakage of refrigerant is found which requires brazing, all of the refrigerant shall be recovered from the system, or isolated (by means of shut off valves) in a part of the system remote from the leak. Removal of refrigerant shall be according to Removal and evacuation.

■ Removal and evacuation

When breaking into the refrigerant circuit to make repairs or for any other purpose-conventional procedures shall be used. However, for flammable refrigerants it is important that best practice be followed, since flammability is a consideration.

The following procedure shall be adhered to:

- safely remove refrigerant following local and national regulations;

- purge the circuit with inert gas (optional for A2L);
- evacuate (optional for A2L);
- continuously flush or purge with inert gas when using flame to open circuit; and open the circuit.

The refrigerant charge shall be recovered into the correct recovery cylinders if venting is not allowed by local and national codes. For appliances containing flammable refrigerants, the system shall be purged with oxygen-free nitrogen to render the appliance safe for flammable refrigerants. This process might need to be repeated several times. Compressed air or oxygen shall not be used for purging refrigerant systems.

For appliances containing flammable refrigerants, refrigerants purging shall be achieved by breaking the vacuum in the system with oxygen-free nitrogen and continuing to fill until the working pressure is achieved, then venting to atmosphere, and finally pulling down to a vacuum (optional for A2L). This process shall be repeated until no refrigerant is within the system (optional for A2L). When the final oxygen-free nitrogen charge is used, the system shall be vented down to atmospheric pressure to enable work to take place.

The outlet for the vacuum pump shall not be close to any potential ignition sources, and entilation shall be available.

■ Charging procedures

In addition to conventional charging procedures, the following requirements shall be followed.

- Ensure that contamination of different refrigerants does not occur when using charging equipment. Hoses or lines shall be as short as possible to minimise the amount of refrigerant contained in them.
- Cylinders shall be kept in an appropriate position according to the instructions.
- Ensure that the REFRIGERATING SYSTEM is earthed prior to charging the system with refrigerant.
- Label the system when charging is complete (if not already).
- Extreme care shall be taken not to overfill the REFRIGERATING SYSTEM.

Prior to recharging the system, it shall be pressure-tested with the appropriate purging gas. The system shall be leak-tested on completion of charging but prior to commissioning. A follow up leak test shall be carried out prior to leaving the site.

■ Decommissioning

Before carrying out this procedure, it is essential that the technician is completely familiar with the equipment and all its detail. It is recommended good practice that all refrigerants are recovered safely. Prior to the task being carried out, an oil and refrigerant sample shall be taken in case analysis is required prior to re-use of recovered refrigerant. It is essential that electrical power is available before the task is commenced.

a) Become familiar with the equipment and its operation.
b) Isolate system electrically.
c) Before attempting the procedure, ensure that:
   - mechanical handling equipment is available, if required, for handling refrigerant cylinders;
   - all personal protective equipment is available and being used correctly;
   - the recovery process is supervised at all times by a competent person;
   - recovery equipment and cylinders conform to the appropriate standards.
d) Pump down refrigerant system, if possible.
e) If a vacuum is not possible, make a manifold so that refrigerant can be removed from various parts of the system.
f) Make sure that cylinder is situated on the scales before recovery takes place.
g) Start the recovery machine and operate in accordance with instructions.
h) Do not overfill cylinders (no more than 80 % volume liquid charge).
i) Do not exceed the maximum working pressure of the cylinder, even temporarily.
j) When the cylinders have been filled correctly and the process completed, make sure that the cylinders and the equipment are removed from site promptly and all isolation valves on the equipment are closed off.
k) Recovered refrigerant shall not be charged into another REFRIGERATING SYSTEM unless it has been cleaned and checked.

■ Labelling

Equipment shall be labelled stating that it has been de-commissioned and emptied of refrigerant. The label shall be dated and signed. For appliances containing FLAMMABLE REFRIGERANTS, ensure that there are labels on the equipment stating the equipment contains FLAMMABLE REFRIGERANT.

■ Recovery

When removing refrigerant from a system, either for servicing or decommissioning, it is recommended good practice that all refrigerants are removed safely.

When transferring refrigerant into cylinders, ensure that only appropriate refrigerant recovery cylinders are employed. Ensure that the correct number of cylinders for holding the total system charge is available. All cylinders to be used are designated for the recovered refrigerant and labelled for that refrigerant (i. e. special cylinders for the recovery of refrigerant). Cylinders shall be complete with pressure-relief valve and associated shut-off valves in good working order. Empty recovery cylinders are evacuated and, if possible, cooled before recovery occurs.

The recovery equipment shall be in good working order with a set of instructions concerning the equipment that is at hand and shall be suitable for the recovery of the

The recovered refrigerant shall be processed according to local legislation in the correct recovery cylinder, and the relevant waste transfer note arranged. Don’t mix refrigerants in recovery units and especially not in cylinders.

flammable refrigerant. If in doubt, the manufacturer should be consulted. In addition, a set of calibrated weighing scales shall be available and in good working order. Hoses shall be complete with leak-free disconnect couplings and in good condition.

If compressors or compressor oils are to be removed, ensure that they have been evacuated to an acceptable level to make certain that flammable refrigerant does not remain within the lubricant. The compressor body shall not be heated by an open flame or other ignition sources to accelerate this process. When oil is drained from a system, it shall be carried out safely.

2. PACKING LIST

Packing list		
Item	Image	Quantity
Swimming pool heat pump	- - - - - - - - - - - - -	1
Installation and user manual	This manual.	1
Hose clamps	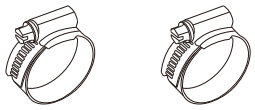	2
Hose connectors		2
Condensate drainage hose	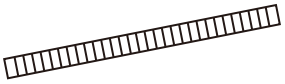	1
Condensate drainage connector		1

3. PREPARING FOR USE

3.1 Typical configuration

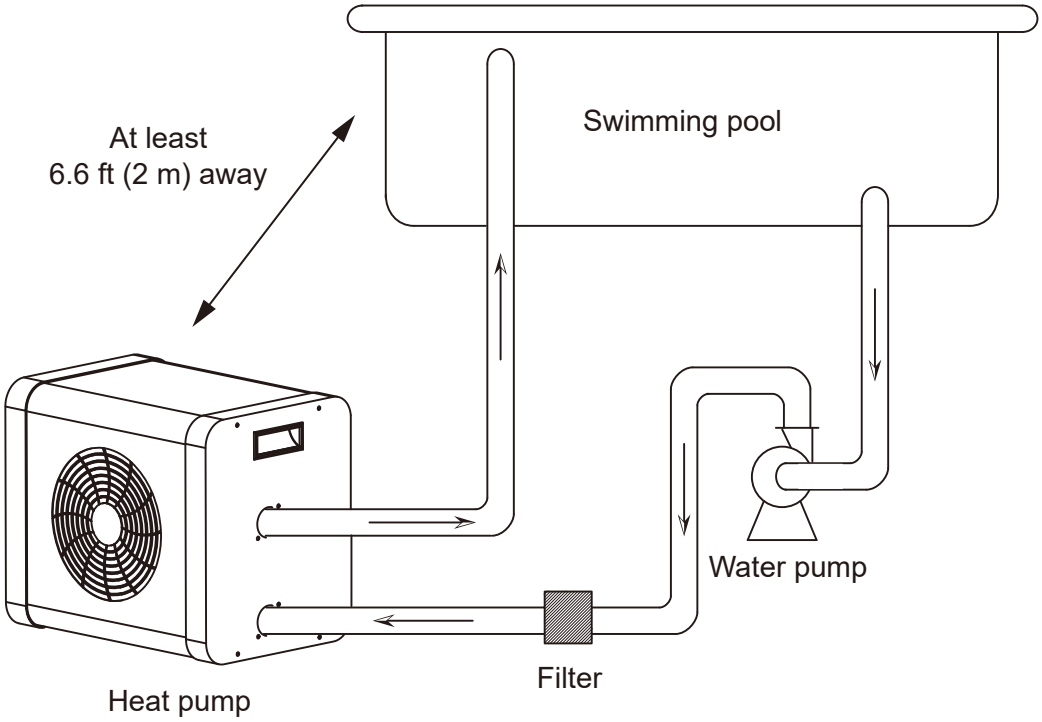

The heat pump unit should be located at least 6.6 feet (2 meters) away from the swimming pool.

3.2 Clearance of the installation

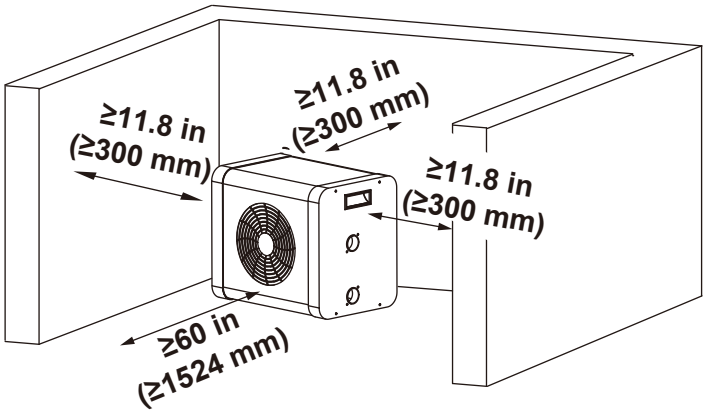

Do not obstruct the fan of the heat pump; leave at least 60 inches free unobstructed space in front of the fan.

A free area of minimum 11.8 inches around the heat pump unit has to be kept clear from any object.

3.3 Condensate drain hoses connection

When the product is operating in heating mode, the heat exchanger on the back of the unit will generate condensed water. The generated condensed water will drip into the internal chassis of the unit and be discharged through the drain outlet at the bottom of the chassis. If you do not want the condensed water to be discharged directly onto the ground, you can install the condensate drain hose and condensate drain connector included in the unit accessories to divert the condensed water to a sewer or other designated locations.
The connection method is illustrated in the figure below:

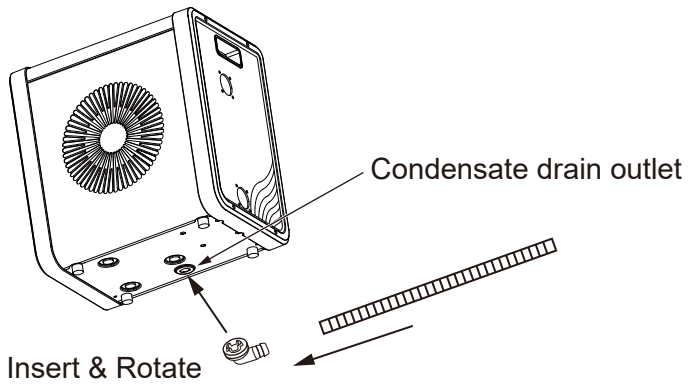

After installing the condensate drain pipe, adjust the height of the four feet according to the placement position of the unit to ensure that the unit is placed stably and horizontally.

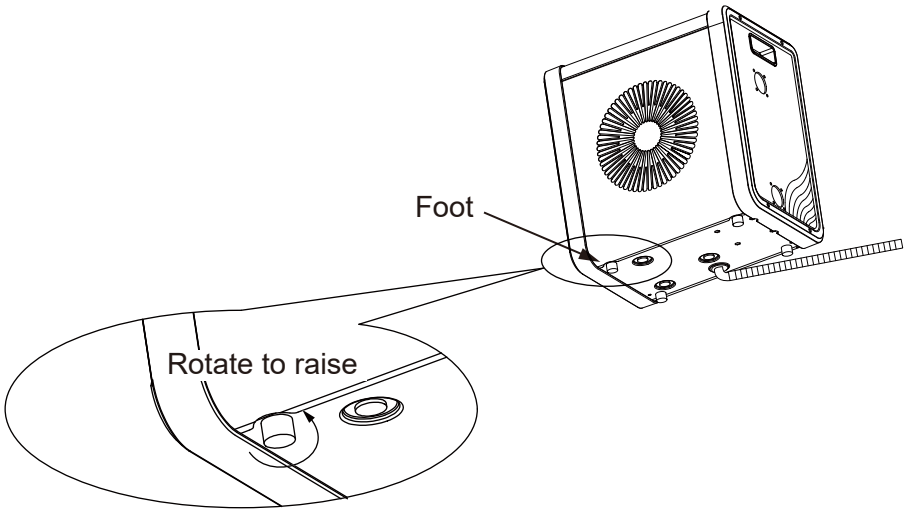

3.4 Hoses connection

Step 1:

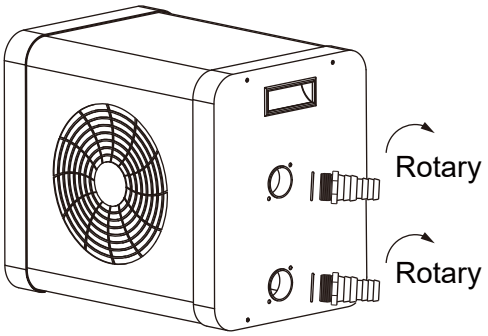

Step 2:

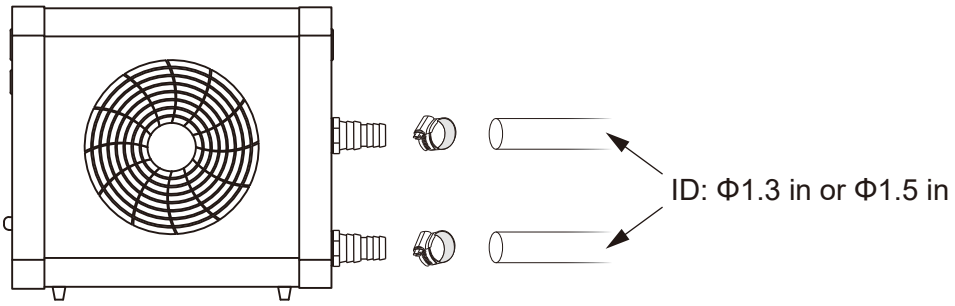

Notes:

It is normal for condensation water to come out of the heat pump unit when the unit is running. This is not fault or leak.

3.5 Electrical connections

WARNING:

The heat pump unit is required reliable earthing connection before usage; otherwise it might cause death or injury. So please make sure the outlet is earthed.

The circulation water pump must be operated with the heat pump. So, please connect the water pump and the heat pump unit to the same circuit.

4. STARTUP AND SETTING

Before the startup, please check whether the water pump is working normally and the water circulates is well.

Turn on the pool circulation pump. Check for possible water leaks and for good water flow to and from the swimming pool.

4.1 Introduction of controller panel and display

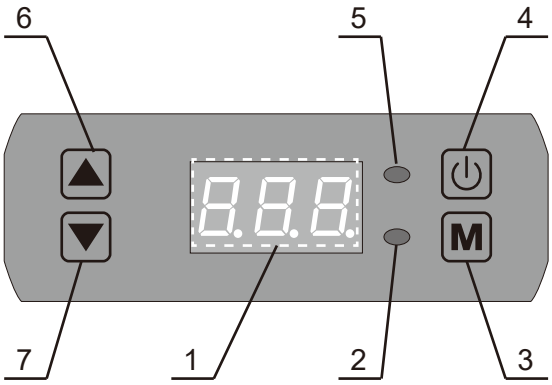

Code	Explanations
1	Displayed icons 1) It displays OFF, when the unit is turned off and under standby. 2) It displays the entering water temperature, during the unit running. 3) It displays the error code, when there is any error during the unit running.
2	Cooling indicator (available for cooling/heating model) When the unit is running under defrosting mode, this indicator will be flashed in green and the heating indicator will be on in red.
3	M Function button When the unit is running, press it to setting heating mode or cooling mode.

Code	Explanations
4	On/Off button
5	Heating indicator When the unit is running under heating mode, the running indicator will be on in red.
6	Increase/Upwards button
7	Decrease/Downwards button

4.2 Startup

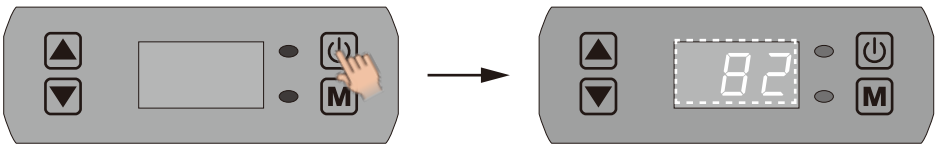

When the heat pump unit is under standby, push the On/Off button to start the unit. The current entering water temperature will appear and the heat pump unit will start automatically. When the inlet water temperature is lower than the setting temperature, the unit will run under heating mode, and the heating indicator (Red) will be active.

Notes:

1. The heat pump will not operate when it is too cold or too hot outside.
2. When the required water temperature is reached, the heat pump unit will not start. Meanwhile the current water temperature will be displayed.
   The unit has 3-minute protection function. When turn on the unit, the compressor is started automatically after 3 minutes later.
3. Several days may be needed to bring the temperature of the swimming pool water to its required temperature, depending the ambient temperature, the initial water
4. temperature and pool volume.
5. A good pool cover and insulation of the piping to and from the swimming pool reduce the heating time considerably.

4.3 Temperature setting

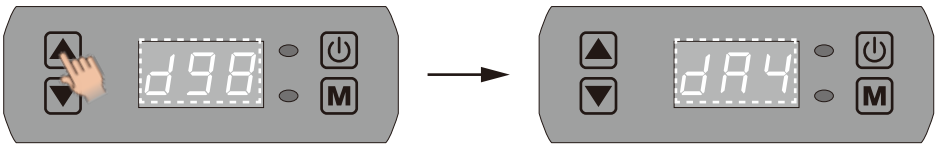

During the heat pump unit running, press the Increase/Upwards button ▲ or the Decrease/Downwards ▼ button to set the required temperature.

Under heating mode, the setting temperature range of the entering water is from 59ºF to 104ºF. (The temperature set value is preceded by a " d " display.)

Under cooling mode, the setting temperature range of the entering water is from 46ºF to 82ºF. (The temperature set value is preceded by a " C " display.)

Note - For temperature display purposes: A0 stands for 100°F; A1 stands for 101°F; A2 stands for 102°F; A3 stands for 103 °F; A4 stands for 104°F.

Only when the heat pump unit is active, the required water temperature can be set.

Without any setting of the temperature for 3 seconds, the display of setting temperature will switch to the current entering water temperature.

4.4 Stop

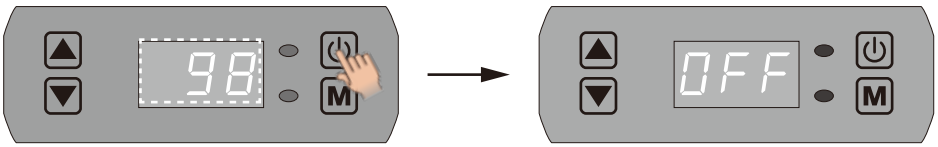

Push the On/Off button ⏻ to stop the heat pump unit. The heat pump unit will shut down, but the fan will keep on turning for 30 seconds.

5. TROUBLESHOOTING

The heat pump unit will show an error/protection message in case of a problem. The following error or protection codes will occur:

Code	Description	Possible reasons
P1	Inlet water temperature sensor error	The temp. sensor is poorly connected to the PCB.
		The temperature sensor is failure.
		The controller is failure.
P3	Condenser temperature sensor error	The temp. sensor is poorly connected to the PCB.
		The temperature sensor is failure.
		The controller is failure.
P5	Ambient temperature sensor error	The temp. sensor is poorly connected to the PCB.
		The temperature sensor is failure.
		The controller is failure.
P7	Ambient temperature protection	It's normal. The ambient temperature > 109.4°F.
		It's normal. The ambient temperature < 46.4°F.
		The temperature sensor is failure.
		The controller is failure.
E3	Water flow switch error	The switch is poorly connected to the PCB.
		The water flow switch is failure.
		There is no water flow in water pipe.
		The controller is failure.

Notes:

1. If the detected ambient temperature exceeds 109.4ºF (43°C), the unit stops running and displays protection code P7. When the ambient temperature drops to ≤104ºF (40°C), the protection is cancelled and normal operation resumes.
2. If the detected ambient temperature is lower than 46.4ºF (8°C), the unit shuts down and displays protection code P7. When the ambient temperature rises to ≥50ºF (10°C), the protection state is released and normal operation resumes.

6. MAINTENANCE

6.1 Condensation

In normal heating operation, the air taken by the heat pump unit is cooled down, so water maybe condenser on the evaporator and drop down on the bottom of the unit.
It is normal for condensation to come out of the heat pump unit. This is not a leak or fault. When the humidity is very high, the condensation could be more.

6.2 Regular maintenance

1. Check the water supply to and from the unit often. It should be avoided that low water flow or air entering into the water pipes, as this will diminish the unit performance and reliability.
2. Clean the swimming pool water regularly to avoid damage to the heat pump unit as a result of dirty pool water.
3. The place surround the heat pump unit should be clear and well ventilated. Regularly clean the evaporator to keep good air flow and efficiency.
4. Regularly check the cable of power supply. In case of abnormal operation or a smell of burning near the heat pump unit, please switch off the unit, and repair it.
5. When the heat pump unit does not work for a long period of time, please discharge all the water at the bottom of the unit.

6.3 Cold/harsh weather conditions

The heat pump unit is designed to operate in rainy weather conditions. However is not recommended to leave it outside for long periods of time (for example: over winter). After draining down the pool for the winter, store the heat pump in a dry place.

6.4 Re-using after long term storage

After the heat pump unit has been stored for a long time, perform the following steps when re-starting the system:

1. Inspect the system for any debris or damage to the case.
2. Clean the evaporator fins if necessary. Make sure the evaporator fins are clean. Blocking the air intake will cause insufficient operation and will result in lower production of heat.
3. Check the fan for blockages.
4. Connect the water inlet and outlet.
5. Turn on the pool water pump to start the water flow to the heat pump unit.

7. ENVIRONMENT

The heat pump unit should not be put into the domestic waste at the end of its useful life, but must be disposed at a central point for recycling of electrical and electronic domestic applications. By doing this, it will be help to preserve the environment.

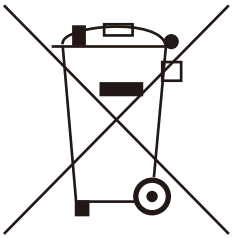

The design and specifications are subject to change without prior notice for product improvement. Consult with the sales agency or manufacturer for details. Any updates to the manual will be uploaded to the service website, please check for the latest version.