PARTS MANUAL

MQ POWER®

MODEL GA2.5HR SERIES

GA2.5HR, GA2.5HRNC, GA2.5HRNC2

60 HZ GENERATOR
(HONDA GX160 GASOLINE ENGINE)

REF NO. A2874201504I

Revision #4 (05/21/25)

To find the latest revision of this publication or associated operation manual, visit our website at: www.multiquip.com

THIS MANUAL MUST ACCOMPANY THE EQUIPMENT AT ALL TIMES.

GA2.5HR, GA2.5HRNC AND GA2.5HRNC2 60 Hz Portable Generator

Explanation of Code in Remarks Column..... 4
Suggested Spare Parts 5

Component Drawings

Nameplate and Decals Assembly..... 6–7
Generator Assembly 8–9
Control Box Assembly 10–11
Pipe Frame Assembly..... 12–13
UWKB Wheel Kit Assembly (Option) 14–15
Engine Service Parts 16–17

NOTICE

Specifications and part numbers are subject to change without notice.

EXPLANATION OF CODE IN REMARKS COLUMN

The following section explains the different symbols and remarks used in the Parts section of this manual. Use the help numbers found on the back page of the manual if there are any questions.

NOTICE

The contents and part numbers listed in the parts section are subject to change without notice. Multiquip does not guarantee the availability of the parts listed.

SAMPLE PARTS LIST

NO.	PART NO.	PART NAME	QTY.	REMARKS
1	12345	BOLT	1	INCLUDES ITEMS W/%
2%		WASHER, 1/4 IN.		NOT SOLD SEPARATELY
2%	12347	WASHER, 3/8 IN.	1	MQ-45T ONLY
3	12348	HOSE	A/R	MAKE LOCALLY
4	12349	BEARING	1	S/N 2345B AND ABOVE

NO. Column

Unique Symbols — All items with same unique symbol (@, #, +, %, or >) in the number column belong to the same assembly or kit, which is indicated by a note in the "Remarks" column.

Duplicate Item Numbers — Duplicate numbers indicate multiple part numbers, which are in effect for the same general item, such as different size saw blade guards in use or a part that has been updated on newer versions of the same machine.

NOTICE

When ordering a part that has more than one item number listed, check the remarks column for help in determining the proper part to order.

PART NO. Column

Numbers Used — Part numbers can be indicated by a number, a blank entry, or TBD.

TBD (To Be Determined) is generally used to show a part that has not been assigned a formal part number at the time of publication.

A blank entry generally indicates that the item is not sold separately or is not sold by Multiquip. Other entries will be clarified in the "Remarks" Column.

QTY. Column

Numbers Used — Item quantity can be indicated by a number, a blank entry, or A/R.

A/R (As Required) is generally used for hoses or other parts that are sold in bulk and cut to length.

A blank entry generally indicates that the item is not sold separately. Other entries will be clarified in the "Remarks" Column.

REMARKS Column

Some of the most common notes found in the "Remarks" Column are listed below. Other additional notes needed to describe the item can also be shown.

Assembly/Kit — All items on the parts list with the same unique symbol will be included when this item is purchased.

Indicated by:

"INCLUDES ITEMS W/(unique symbol)"

Serial Number Break — Used to list an effective serial number range where a particular part is used.

Indicated by:

"S/N XXXXX AND BELOW"
"S/N XXXX AND ABOVE"
"S/N XXXX TO S/N XXX"

Specific Model Number Use — Indicates that the part is used only with the specific model number or model number variant listed. It can also be used to show a part is NOT used on a specific model or model number variant.

Indicated by:

"XXXXX ONLY"
"NOT USED ON XXXX"

"Make/Obtain Locally" — Indicates that the part can be purchased at any hardware shop or made out of available items. Examples include battery cables, shims, and certain washers and nuts.

"Not Sold Separately" — Indicates that an item cannot be purchased as a separate item and is either part of an assembly/kit that can be purchased, or is not available for sale through Multiquip.

GA2.5HR-SERIES 60 HZ PORTABLE GENERATOR WITH HONDA GX160RT2EMAN GASOLINE ENGINE

1 to 3 units

Qty.	P/N	Description
1	0430430120	CAP FUEL TANK
1	0605505162	FILTER FUEL
1	16081471831	CUP, FUEL STRAINER
2	7935419204	RUBBER SUSPENSION
2	7935419304	RUBBER SUSPENSION
3	16952GG2731	SCREEN SET
3	9807956846	SPARK PLUG
1	34150ZH7013	OIL ALERT UNIT
1	35480Z0T003	SWITCH ASSY., OIL LEVEL
2	28462ZH8003	ROPE, RECOIL
2	28461Z4M003	KNOB, RECOIL STARTER
3	17211ZB2000	ELEMENT AIR CLEANER

NOTICE

Part numbers on this Suggested Spare Parts list may supersede/replace the part numbers shown in the following parts lists.

GA2.5HR — NAMEPLATE AND DECALS ASSY.

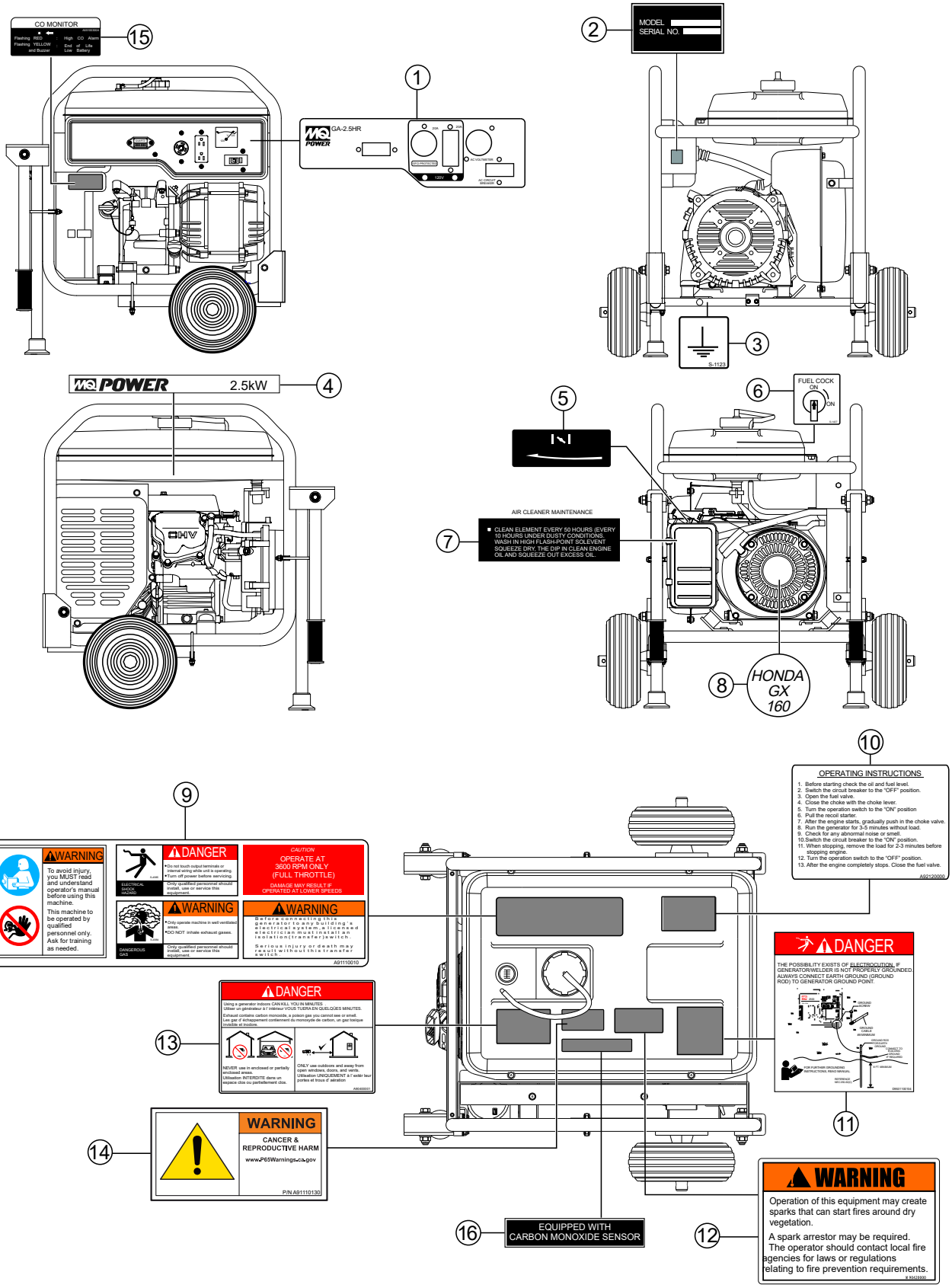

GA2.5HR — NAMEPLATE AND DECALS ASSY.

NO.	PART NO.	PART NAME	QTY.	REMARKS
1	A2511203102	DECAL: CONTROL PANEL	1	A21120310
2		DECAL: NAMEPLATE	1	CONTACT MQ PARTS DEPT.
3	0800628504	DECAL: GROUND	1	S1123
4	A2561001203	DECAL: MQ POWER GA2.5H	1	
5	87528ZB2630	DECAL: CHOKE	1	REPLACES P/N Y0600500046
6	1980680004	DECAL: FUEL COCK	1	S3704
7	87533ZC0630	DECAL: AIR CLEANER	1	REPLACES P/N 0600500045
8	87521Z4M000	EMBLEM, GX160	1	
9	A9511100103	DECAL: WARNING	1	A91110010 S/N 5750007 AND BELOW
9	A9511100113	DECAL: WARNING	1	A91110011 S/N 5750008 AND ABOVE
10	A9521200004	DECAL: OPERATING INSTRUCTIONS	1	A92120000
11	D9531100104	DECAL: DANGER ELECTROCUTION	1	D93110010
12	920214100	DECAL: WARNING START FIRES	1	REPLACES P/N M9504200004
13	A9504000014	DECAL: WARNING DANGEROUS GAS	1	A90400001
14	A9511101304	DECAL: WARNING PROPOSITION 65	1	A91110130 S/N 5820800 AND ABOVE
15	A5551003004	DECAL: CO SENSOR (GA2.5HRNC2)	1	A55100300A S/N 50001096 AND ABOVE GA2.5HRNC2
16	A9511101904	DECAL: EQUIPPED WITH CO SENSOR	1	A91110190 S/N 50001096 AND ABOVE GA2.5HRNC2

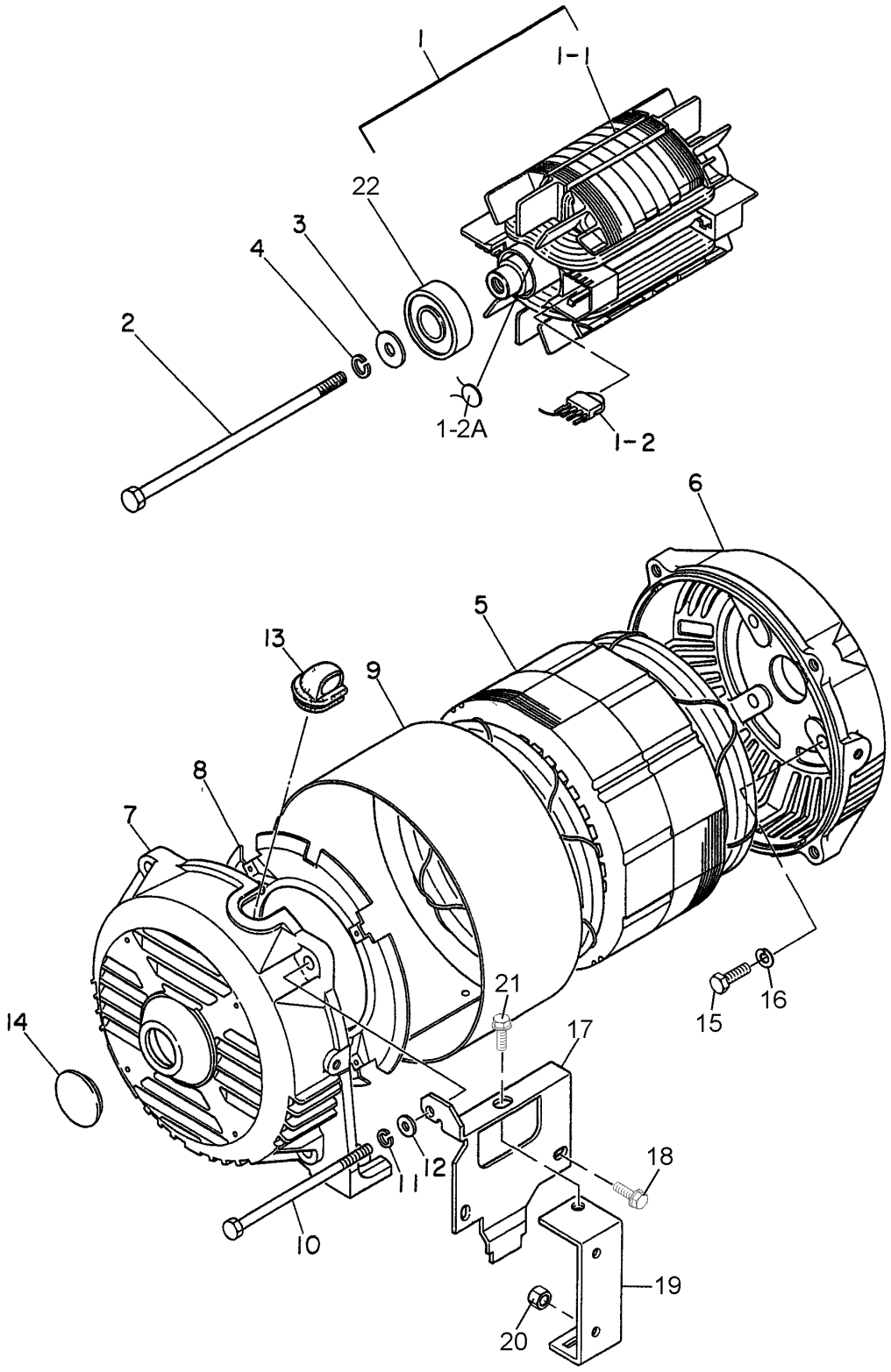
1
1-1
22
3
4
2
1-2A
1-2
6
5
13
9
8
7
14
21
17
15
16
12
11
18
10
19
20

GA2.5HR — GENERATOR ASSY.

NO.	PART NO.	PART NAME	QTY.	REMARKS
1	7931000203	ROTOR ASSY.	1	INCLUDES ITEMS W/$
1-1$		FIELD COIL ASSY.	1	NOT SOLD SEPERATELY
1-2$	0601823213	RECTIFIER	2	
1-2A$	0601822638	SURGE ABSORBER	2	S/N 5845320 AND BELOW
1-2A$	0601822692	SURGE ABSORBER	2	S/N 5845321 AND ABOVE
2	7681017104	SET BOLT, ROTOR	1	
3	0801086004	SET WASHER, BEARING	1	
4	0040008000	SPRING WASHER	1	
5	A2135000203	ARMATURE ASSY.	1	
6	7931315002	END BRACKET (C SIDE)	1	
7	7931315102	END BRACKET (B SIDE)	1	
8	7875021523	GUIDE PANEL, AIR	1	
9	7681331003	COVER	1	
10	7681344204	SET BOLT, STATOR	4	
11	0040006000	SPRING WASHER	4	
12	0041206000	PLAIN WASHER	4	
13	7871329514	GROMMET	1	
14	0601851760	CAP	1	
15	0013608020	HEX. HEAD BOLT	4	
16	0040008000	WASHER, LOCK	4	
17	7935420104	MUFFLER STAY	1	
18	0017106016	HEX. HEAD BOLT	2	
19	7935420004	MUFFLER STAY	1	
20	0207206000	HEX. NUT	2	
21	0017108020	HEX. HEAD BOLT	1	
22	0603000040	BEARING	1	

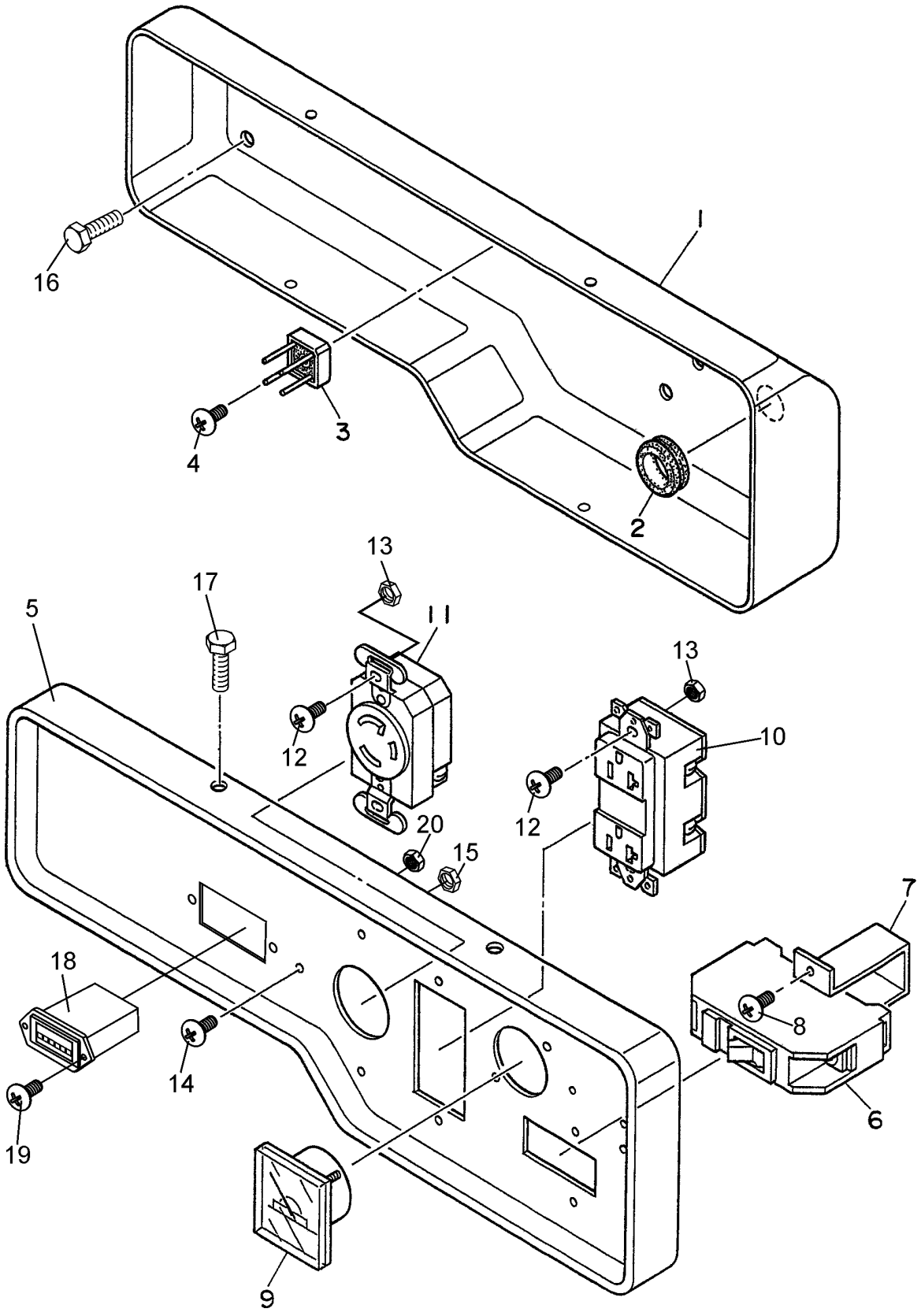
1
2
3
4
5
6
7
8
9
10
11
12
13
14
15
16
17
18
19
20

GA2.5HR — CONTROL BOX ASSY.

NO.	PART NO.	PART NAME	QTY.	REMARKS
1	A0101000103	CONTROL BOX	1	
2	0601850112	GROMMET	1	
3	0601823204	RECTIFIER	1	
4	0027103012	MACHINE SCREW	1	
5	A2224000103	CONTROL PANEL	1	
6	0601807368	CIRCUIT BREAKER, 20A	1	
7	3011816004	BRACKET, CIRCUIT BREAKER	1	
8	0021004010	MACHINE SCREW	2	
9	0601806819	AC VOLTMETER, 0~120V	1	
10	0601814013	RECEPTACLE, 5-20R	1	S/N 5791170 AND BELOW
10	0601814024	RECEPTACLE, 5-20R	1	S/N 5791171 ~ 5842298
10	0601814034	RECEPTACLE, 5-20R	1	S/N 5842299 AND ABOVE
11	0601811092	RECEPTACLE, L5-20R	1	REPLACES P/N 0601812592
12	0021004010	MACHINE SCREW	4	
13	OEMAA8	HEX. NUT	4	REPLACES P/N 0038404000
14	0021004015	MACHINE SCREW	1	
15	OEMAA8	HEX. NUT	1	REPLACES P/N 0038404000
16	0017106016	HEX. HEAD BOLT	4	
17	0017105010	HEX. HEAD BOLT	4	
18	Y0601800699	HOUR METER	1	
19	Y0021003012	HEX. HEAD BOLT	2	
20	0038403000	HEX. NUT	2	

GA2.5HR — PIPE FRAME ASSY.

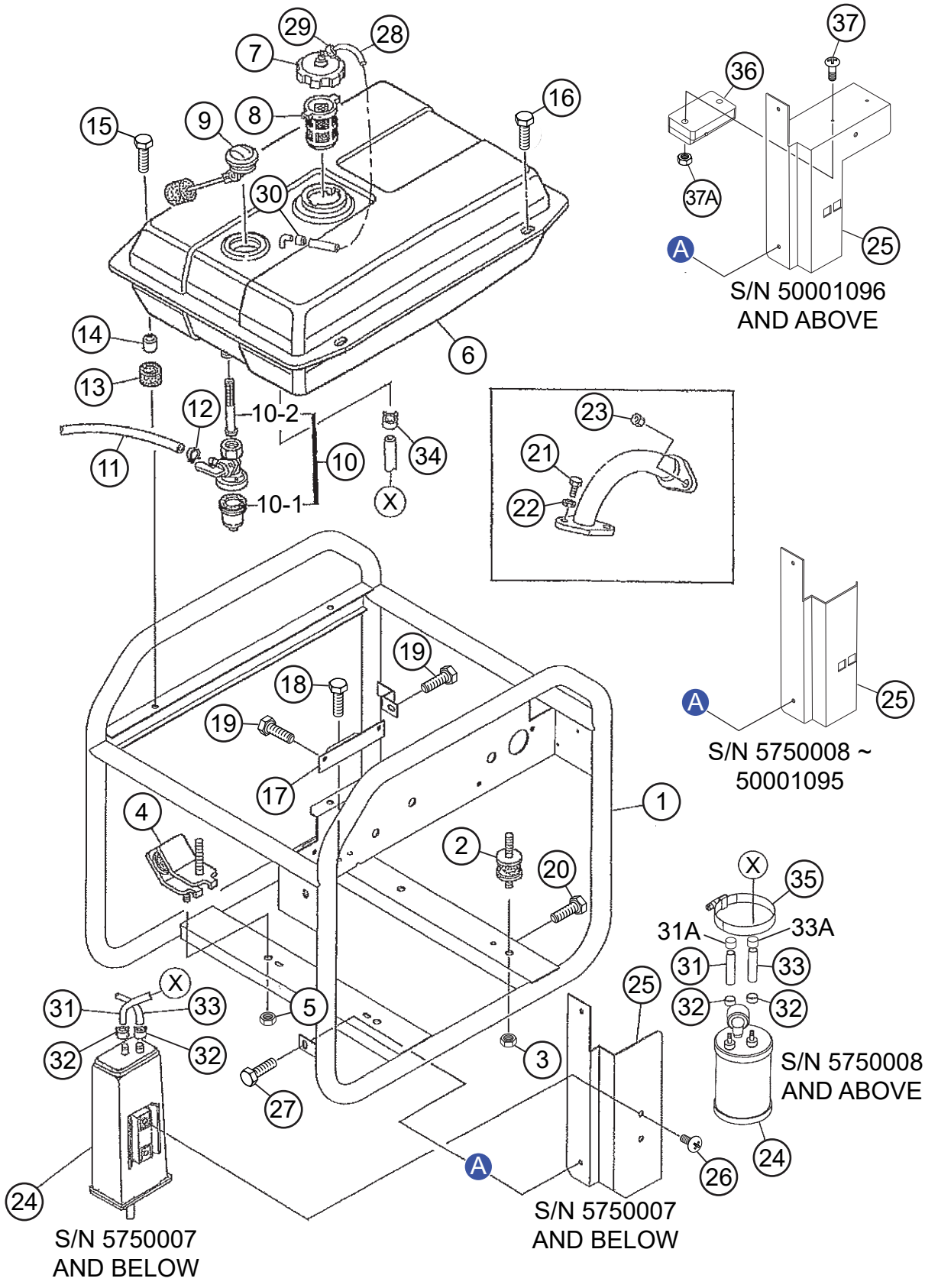

GA2.5HR — PIPE FRAME ASSY.

NO.	PART NO.	PART NAME	QTY.	REMARKS
1	A2417001502	PIPE FRAME	1	
2	7935419204	RUBBER SUSPENSION	2	
3	020108060	HEX. NUT	4	REPLACES P/N 0207008000
4	7935419304	RUBBER SUSPENSION	2	
5	020108060	HEX. NUT	4	REPLACES P/N 0207008000
6	A2361000004	FUEL TANK	1	S/N 5868949 AND BELOW
6	A2361000014	FUEL TANK	1	S/N 5868950 AND ABOVE
7	0430430120	CAP, FUEL TANK	1	REPLACES P/N 0605505068 S/N 5859108 AND BELOW
7	A2361000304	CAP, FUEL TANK	1	S/N 5859109 AND ABOVE
8	0605505162	FUEL FILTER	1	
9	0602125034	FUEL GAUGE	1	
10	16950898633	COCK ASSY., FUEL	1	REPLACES P/N Y0605510064 INCLUDES ITEMS W/#
10-1#	16081471831	CUP, FUEL STRAINER	1	REPLACES P/N 0605510066
10-2#	16952GG2731	SCREEN SET	1	REPLACES P/N Y0605510063
11	91424ZBH802	HOSE	1	
12	950024080008	HOSE BAND	2	REPLACES P/N 0605515241
13	W7855525514	RUBBER CUSHION	2	
14	7855525604	COLLAR	2	
15	011208030	HEX. HEAD BOLT	2	REPLACES P/N 0017108030
16	011008020	HEX. HEAD BOLT	2	REPLACES P/N 0017108020
17	7935421004	BRACKET	1	
18	0017106016	HEX. HEAD BOLT	2	
19	0017106016	HEX. HEAD BOLT	3	
20	0019206016	HEX. HEAD BOLT	1	
21	0011308020	HEX. HEAD BOLT	2	
22	0040008000	WASHER, LOCK	2	
23	020108060	HEX. NUT	2	REPLACES P/N 0031308000
24	0605507001	CANISTER	1	S/N 5750007 AND BELOW
24	0605507004	CANISTER	1	S/N 5750008 ~ 5859108
24	0605507008	CANISTER	1	S/N 5859109 AND ABOVE
25	A2261600004	BRACKET	1	S/N 5750007 AND BELOW
25	A2261600504	BRACKET	1	S/N 5750008 ~ 50001095
25	A2261603404	BRACKET (GA2.5HRNC2)	1	S/N 50001096 AND ABOVE
26	Y0021806012	MACHINE SCREW	2	S/N 5750007 AND BELOW
27	011106015	HEX. HEAD BOLT	2	REPLACES P/N 0016906015
28	0605513189	HOSE	1	S/N 5814073 AND BELOW
28	0605513219	HOSE	1	S/N 5814074 AND ABOVE
29	0605515280	HOSE BAND	1	S/N 5814073 AND BELOW
30	0605515281	HOSE BAND	1	S/N 5814073 AND BELOW

GA2.5HR — PIPE FRAME ASSY. (CONT'D.)

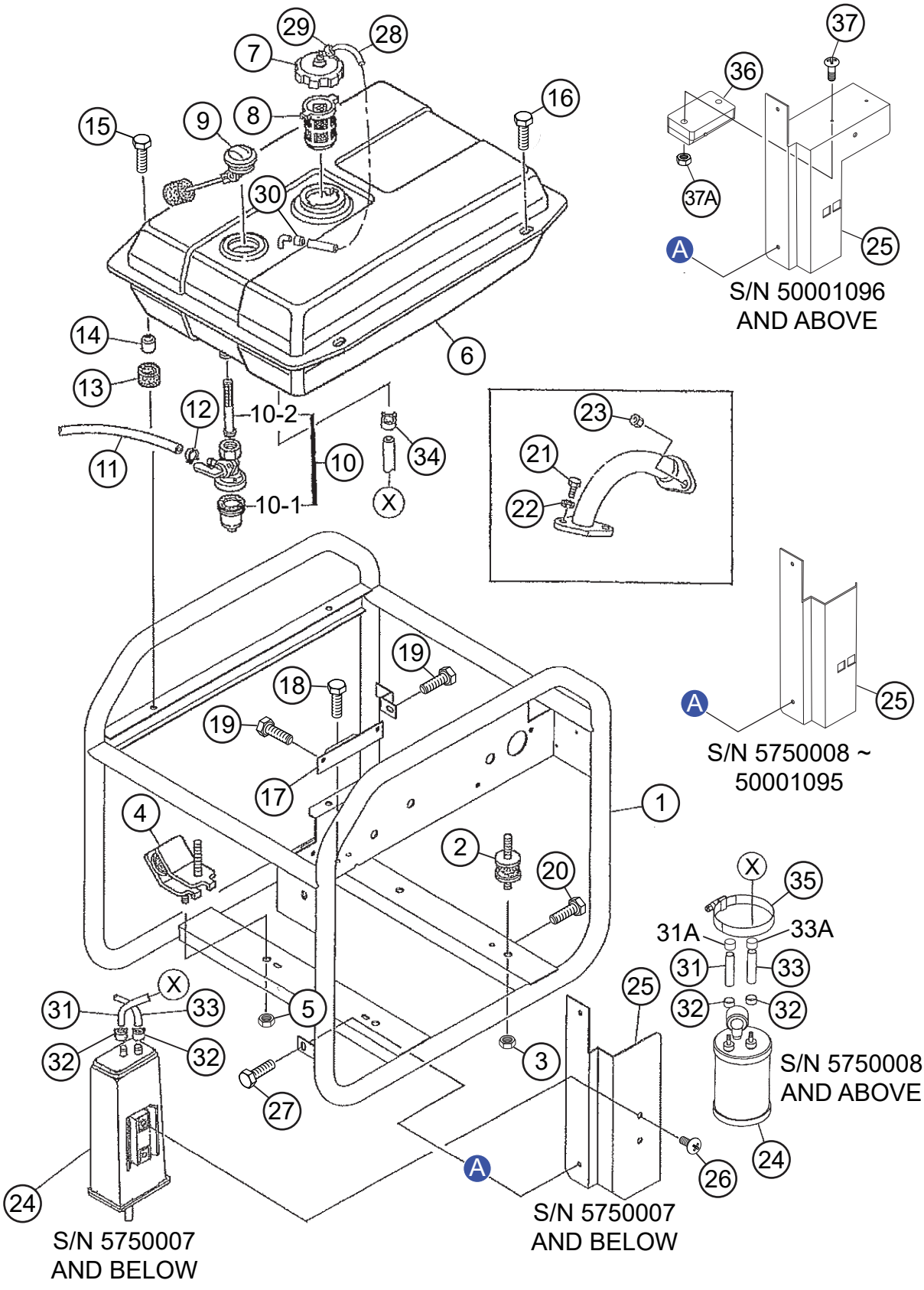

GA2.5HR — PIPE FRAME ASSY. (CONT'D.)

NO.	PART NO.	PART NAME	QTY.	REMARKS
31	0605513188	HOSE	1	
31A	0605513218	RUBBER CAP	1	S/N 5750008 AND ABOVE
32	0605515224	HOSE BAND	2	
33	0605513186	HOSE	1	
33A	0605513218	RUBBER CAP	1	S/N 5750008 AND ABOVE
34	0605515223	HOSE BAND	2	S/N 5814073 AND BELOW
34	0605515223	HOSE BAND	4	S/N 5814074 AND ABOVE
35	0605515210	HOSE BAND	1	S/N 5750008 AND ABOVE
36	0602211802	CO SENSOR (GA2.5HRNC2)	1	S/N 50001096 AND ABOVE
37	0027103035	MACHINE SCREW (GA2.5HRNC2)	2	S/N 50001096 AND ABOVE
37A	0038403000	HEX. NUT (GA2.5HRNC2)	2	S/N 50001096 AND ABOVE

GA2.5HR — UWKB WHEEL KIT ASSY. (OPTION)

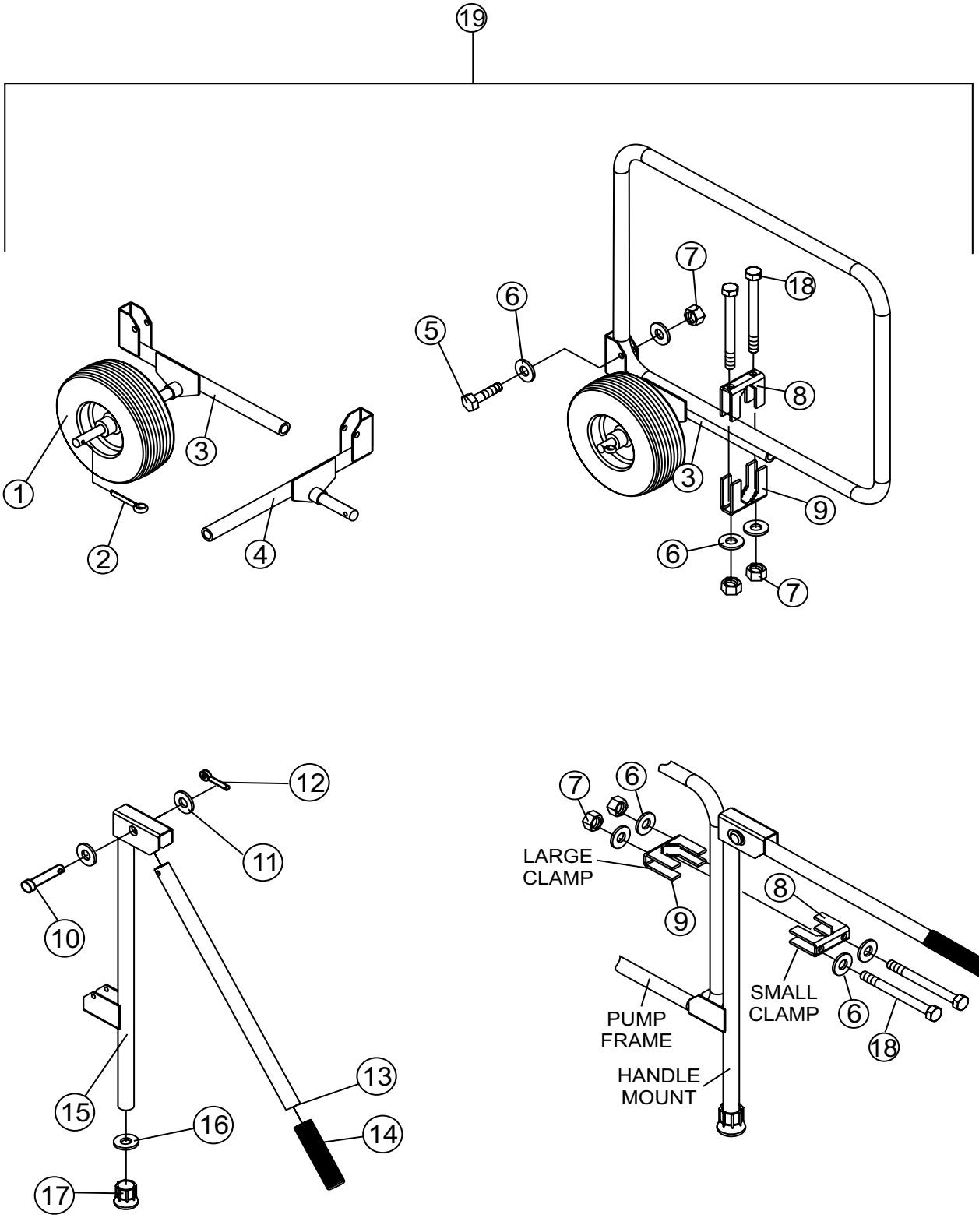

GA2.5HR — UWKB WHEEL KIT ASSY. (OPTION)

NO.	PART NO.	PART NAME	QTY.	REMARKS
1#	19850	WHEEL TIRE SOLID	2	REPLACES P/N WK1312
2#	8158	PIN, COTTER, 3/16" X 1-1/2"	2	
3#	29748	AXLE MOUNT W/A LEFT 3-5/8"	1	
4#	29744	AXLE MOUNT W/A RIGHT 3-5/8"	1	
5#	WK34715	SCREW, M6 X 45	4	
6#	0948	WASHER, FLAT SAE 1/4"	24	
7#	WK34717	NUT, NYLOC M6	12	
8#	WK2250	CLAMP SMALL	4	
9#	WK2300	CLAMP LARGE	4	
10#	29787	PIN, CLEVIS 5/16 X 1-1/2"	2	
11#	0300 B	WASHER, FLAT SAE 5/16"	4	
12#	0683	PIN, COTTER 3/32" X 3/4"	2	
13#	29739	TUBE, HANDLE	2	
14#	15081	GRIP, HAND	2	REPLACES P/N 19717
15#	29746	HANDLE MOUNT W/A	2	
16#	4001	WASHER FLAT USS 3/8" PLD	2	
17#	19716	CRUTCH TIP	2	
18#	WK34716	SCREW, HHC M6 X 90MM	8	
19	UWKB	WHEEL KIT, UNIVERSAL	1	INCLUDES ITEMS W/#

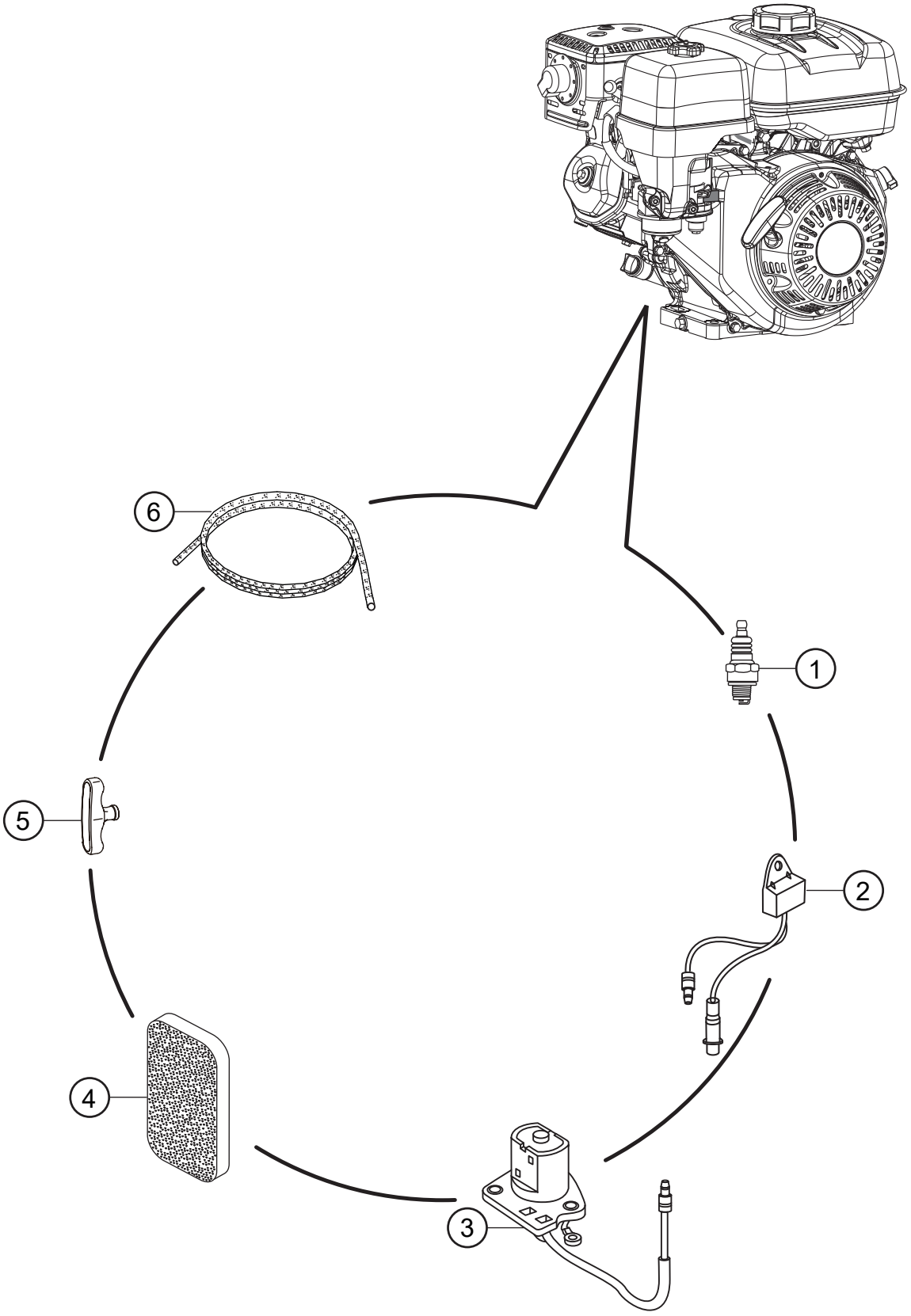
6
1
5
2
4
3

NO.	PART NO.	PART NAME	QTY.	REMARKS
1	9807956846	SPARK PLUG	1	
2	34150ZH7013	OIL ALERT UNIT	1	
3	35480Z0T003	SWITCH ASSY., OIL LEVEL	1	
4	17211ZB2000	ELEMENT, AIR CLEANER	1	
5	28461Z4M003	KNOB, RECOIL STARTER	1	
6	28462ZH8003	ROPE, RECOIL STARTER	1	

PARTS MANUAL

HERE'S HOW TO GET HELP

PLEASE HAVE THE MODEL AND SERIAL NUMBER ON HAND WHEN CALLING

UNITED STATES

Multiquip Inc.

(310) 537- 3700
6141 Katella Avenue Suite 200
Cypress, CA 90630
E-MAIL: mq@multiquip.com
WEBSITE: www.multiquip.com

CANADA

Multiquip

(450) 625-2244
4110 Industriel Boul.
Laval, Quebec, Canada H7L 6V3
E-MAIL: infocanada@multiquip.com

UNITED KINGDOM

Multiquip (UK) Limited Head Office

0161 339 2223
Unit 2, Northpoint Industrial Estate, Globe Lane,
Dukinfield, Cheshire SK16 4UJ
E-MAIL: sales@multiquip.co.uk

© COPYRIGHT 2025, MULTIQUIP INC.

Multiquip Inc., the MQ logo and the MQ Power logo are registered trademarks of Multiquip Inc. and may not be used, reproduced, or altered without written permission. All other trademarks are the property of their respective owners and used with permission.

This manual MUST accompany the equipment at all times. This manual is considered a permanent part of the equipment and should remain with the unit if resold.

DISCLAIMER: Product features, descriptions, and specifications are based on published information at the time of publication and are subject to change at any time without notice. Multiquip Inc. and its affiliates reserve the right to change specifications, features, design, and descriptions of products at any time without notice.

Manufactured for
MQ Power Inc.
by
DENYO MANUFACTURING CORP.