GA6HRNC2

Generator - Portable Pipe Frame

MULTIQUIP

MAXIMUM OUTPUT

6.0 kW

CONTINUOUS OUTPUT

5.0 kW

ENGINE

Honda GX340



APPLICATIONS

Construction and industrial sites, Emergency power supply, Camping/off-grid living, Outdoor events, Mobile businesses, Agriculture/Farming, Remote work.

STANDARD FEATURES

- **Reliable Honda GX340** gasoline engine with low oil shutdown sensor.
- **Automatic idle control** reduces engine speed during periods of no load and improves fuel economy.
- **Silent type muffler** with USFS-approved spark arrestor, dB 75 @ 23 ft.
- **Brushless alternator** design for low maintenance and dependable service.
- **Heavy-duty 1-inch tubular steel pipe frame** provides rugged protection for engine and alternator in demanding jobsite conditions.
- **Robust control panel** with clearly labeled switches and circuit protection.
- **Large-capacity fuel tank** delivers extended runtime for full-day operation.
- **Multiple outlet configurations** support a range of tools and jobsite requirements.
- **OSHA and NEC compliant** with full GFCI protection.
- **Complete generator instrumentation** includes 2-pole breaker (60Hz), AC voltmeter, hour meter, idle control switch and full power switch.
- **Carbon monoxide sensor** eliminates CO poisoning by automatically shutting down when harmful gases are detected.
- **Folding lifting bail** enables safe overhead hoisting with cranes or forklifts.
- **Wheel kit with folding handles and flat free tires** for easy transport.

WARRANTY*

GA6HRNC2: 24 months from date of purchase.

Honda GX340 Engine: 36 months from date of purchase.

**Refer to the MULTIQUIP NEW PRODUCT LIMITED WARRANTY FOR FULL TERMS AND CONDITIONS.*

© COPYRIGHT 2026 MULTIQUIP INC. (REV 06012026)

MULTIQUIP

GA6HRNC2

FEATURES

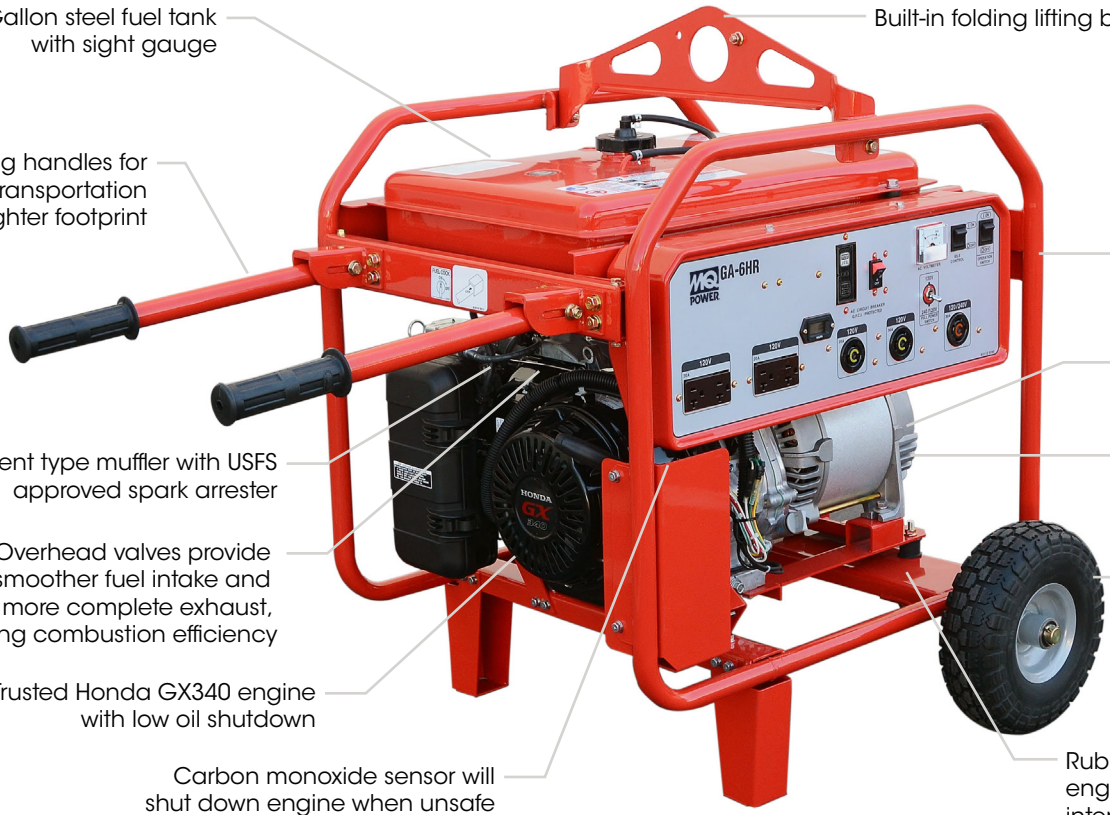

5 Gallon steel fuel tank with sight gauge

Built-in folding lifting bail

Folding handles for easy transportation and tighter footprint

Heavy-duty 1" (25.4 mm) pipe frame for durability

100% copper winding and Class B insulation

Silent type muffler with USFS approved spark arrester

Brushless alternator provides low maintenance and dependable service

Overhead valves provide smoother fuel intake and more complete exhaust, boosting combustion efficiency

Flat-free tires for reliable transport across rough jobsite terrain

Trusted Honda GX340 engine with low oil shutdown

Carbon monoxide sensor will shut down engine when unsafe concentrations are detected

Rubber vibration-isolated engine mounts help protect internal components and extend service life

© COPYRIGHT 2026 MULTIQUIP INC. (REV 06012026)

Breaker provides protection for 60 Hz receptacles

GFCI protection for all receptacles

Voltmeter serves as diagnostic tool

Hour meter allows accurate tracking of usage and maintenance intervals

Idle control switch to reduce fuel consumption

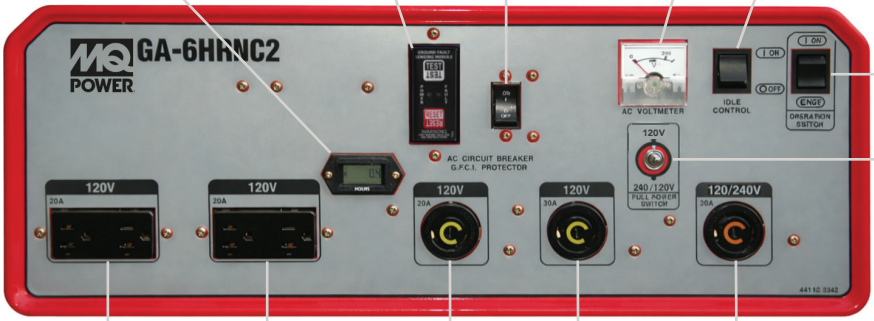

ON/OFF switch

Full power switch allows full-rated power of generator at 120V

30 Amp - 120V/240V - 60Hz Receptacle L14-30R

30 Amp - 120V - 60Hz Receptacle L5-30R

20 Amp - 120V - 60Hz Receptacle L5-20R

20 Amp - 120V - 60Hz Receptacle 5-20R

GA6HRNC2

GENERATOR DIMENSIONS

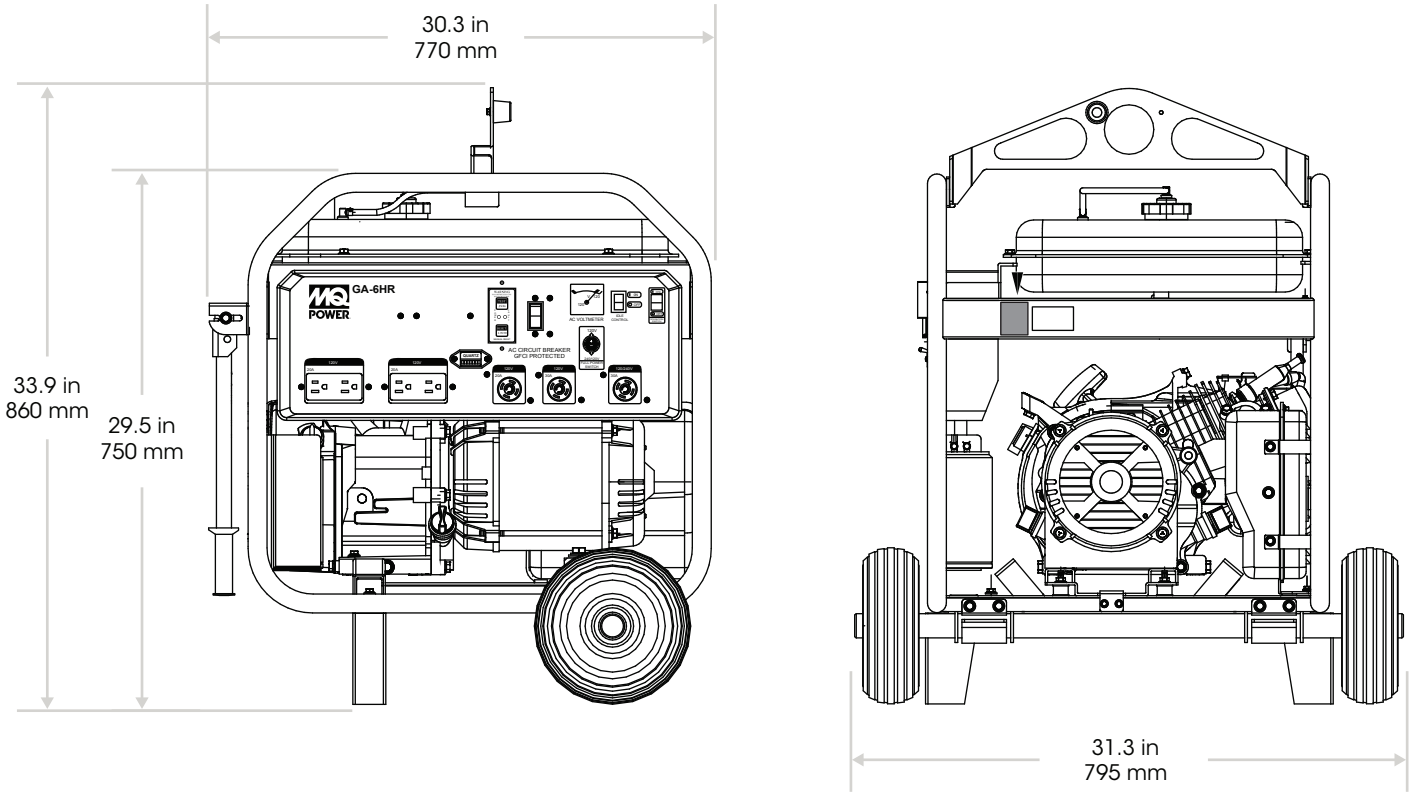

CABLE OPTIONS

CABLE SELECTION (60 HZ, SINGLE-PHASE OPERATION)

AMPS	LOAD IN WATTS		MAXIMUM ALLOWABLE CABLE LENGTH			
	120 VOLTS	240 VOLTS	25 FT	50 FT	100 FT	150 FT
2.5	300	600	16 AWG	16 AWG	14 AWG	12 AWG
5	600	1200	16 AWG	14 AWG	12 AWG	10 AWG
7.5	900	1800	14 AWG	14 AWG	12 AWG	10 AWG
10	1200	2400	14 AWG	12 AWG	12 AWG	10 AWG
15	1800	3600	14 AWG	12 AWG	12 AWG	10 AWG
20	2400	4800	12 AWG	12 AWG	10 AWG	10 AWG
25	3000	6000	10 AWG	10 AWG	10 AWG	8 AWG

CAUTION: Equipment damage can result from low voltage.

Long or undersized extension cords can reduce the voltage available to your equipment, causing power loss and inefficient operation.

When using such cords, select a cord rated for a slightly higher wattage than your device requires. Refer to the table above for recommended cord gauges and lengths based on the power demand of your electrical equipment.

© COPYRIGHT 2026 MULTIQUIP INC. (REV 06012026)

MULTIQUIP

GA6HRNC2

SPECIFICATIONS

GENERATOR SPECIFICATIONS	
MODEL	GA6HRNC2
TYPE	BRUSHLESS REVOLVING FIELD
EXCITATION	SOLID STATE STATICALLY EXCITED
INSULATION	CLASS B
COOLING SYSTEM	SELF-VENTILATION
AMBIENT TEMPERATURE RATING	23° F – 104° F (-5° C – 40° C)
MAXIMUM OUTPUT	6.0 kW
CONTINUOUS DUTY RATING	5.0 kW
VOLTAGE	120 / 240V
MAXIMUM CURRENT	50.0 / 25.0A
CONTINUOUS CURRENT	41.7 / 20.8A
FREQUENCY	60 Hz
PHASE	SINGLE PHASE (4-WIRES)
POWER FACTOR	1.0
VOLTAGE REGULATION	± 5%
MAIN LINE CIRCUIT BREAKER	23.0A (2-POLE)
RECEPTACLES	(2) 5-20R DUPLEX, (1) L5-20R, (1) L5-30R, (1) L14-30R
VOLTMETER	STANDARD
HOUR METER	STANDARD
WHEEL TYPE	FLAT FREE
LIFTING BAIL MAX CAPACITY	290 lb (132 kg)

ENGINE SPECIFICATIONS	
MAKE/MODEL	HONDA GX340
EMISSIONS	EPA CERTIFIED
STARTING SYSTEM	RECOIL
DESIGN	AIR COOLED, 4 STROKE, SINGLE CYLINDER OHV, HORIZONTAL SHAFT
HORSE POWER	10.7
ENGINE SPEED	3,600 RPM
SOUND LEVEL dB(A) @ 23 ft	75
GOVERNOR SYSTEM	CENTRIFUGAL MASS TYPE
OIL CAPACITY	1.16 QUARTS (1.1 LITER)
OIL TYPE	SAE 10W-30
LUBRICATION SYSTEM	SPLASH
LOW OIL SHUTDOWN	STANDARD
COOLING SYSTEM	AIR COOLING
BORE x STROKE	3.46 x 2.52 in (88 x 64 mm)
CARBON MONOXIDE SENSOR	STANDARD

FUEL SYSTEM	
RECOMMENDED FUEL	UNLEADED GASOLINE
FUEL TANK CAPACITY	5.0 GALLONS (19 LITERS)
RUN TIME (FULL LOAD)	5.7 HOURS
FUEL CONSUMPTION AT FULL LOAD	0.88 GPH (3.3 LPH)

WEIGHT AND DIMENSIONS	
DRY WEIGHT	220.5 lb (100.0 kg)
WET WEIGHT	254.1 lb (115.3 kg)
DIMENSIONS	30.3 x 31.1 x 29.5 in (770 x 795 x 750 mm)

OPTIONS

MAINTENANCE KIT

- **FKITGA6HR –** Maintenance kit includes (1) air cleaner element, (1) fuel strainer, and (1) spark plug

GENERATOR FORMULAS (1Ø)

AMPS, VOLTS, AND WATTS

- Amps x Volts = Watts
- Amps ÷ Watts = Volts
- Volts ÷ Watts = Amps

STARTING AMPS vs RUNNING AMPS

- **Starting amps** (or surge amps) are the high, temporary surge of electricity (3-10 times normal) required to start a motor, lasting a few seconds
- **Running amps** are the lower, steady amount of electricity required to keep equipment operating continuously

HORSE POWER vs WATTS

- 1 Horsepower = 746 Watts
- **EXAMPLE**: 3 Horsepower x 746 = 2,238 Watts

TOOL WATTAGE		
TOOLS	RUNNING (RATED) WATTS	STARTING (SURGE) WATTS
BOX FAN	300	600
CIRCULAR SAW	1500	1500
COMPUTER	800	0
DEEP FREEZER	500	800
MITER SAW	1200	1800
MICROWAVE	1000	2000
REFRIGERATOR/FREEZER	800	1200
TELEVISION	500	0
RECIPROCATING SAW	950	1200
SUMP PUMP	800	1200
WELL WATER PUMP	1000	1500

CAUTION: The generator's surge wattage is intended for **momentary startup loads only.** Connect electrical devices whose **rated (running) wattage** is **at or below** the generator's rated output. **Do not** connect any device that requires wattage equal to the generator's surge capacity.

© COPYRIGHT 2026 MULTIQUIP INC. (REV 06012026)

NOTICE Features and Specifications are subject to change without notice.