# GA6HRSNC2

## Generator - Portable Pipe Frame

**MAXIMUM OUTPUT**

**6.0 kW**

**CONTINUOUS OUTPUT**

**5.0 kW**

**ENGINE**

**Honda GX340**



## APPLICATIONS

Construction and industrial sites, Emergency power supply, Camping/off-grid living, Outdoor events, Mobile businesses, Agriculture/Farming, Remote work.

## STANDARD FEATURES

- **Reliable Honda GX340** gasoline engine with electric start and low oil shutdown sensor.
- **Automatic idle control** reduces engine speed during periods of no load and improves fuel economy.
- **Silent type muffler** with USFS-approved spark arrestor, dB 75 @ 23 ft.
- **Brushless alternator** design for low maintenance and dependable service.
- **Heavy-duty 1-inch tubular steel pipe frame** provides rugged protection for engine and alternator in demanding jobsite conditions.
- **Robust control panel** with clearly labeled switches and circuit protection.
- **Large-capacity fuel tank** delivers extended runtime for full-day operation.
- **Multiple outlet configurations** support a range of tools and jobsite requirements.
- **OSHA and NEC compliant** with full GFCI protection.
- **Complete generator instrumentation** includes 2-pole breaker (60Hz), AC voltmeter, hour meter, idle control switch and full power switch.
- **Carbon monoxide sensor** eliminates CO poisoning by automatically shutting down when harmful gases are detected.
- **Folding lifting bail** enables safe overhead hoisting with cranes or forklifts.
- **Wheel kit with folding handles and flat free tires** for easy transport.

**WARRANTY***

**GA6HRSNC2:** 24 months from date of purchase.

**Honda GX340 Engine:** 36 months from date of purchase.

**Refer to the MULTIQUIP NEW PRODUCT LIMITED WARRANTY FOR FULL TERMS AND CONDITIONS.*

© COPYRIGHT 2026 MULTIQUIP INC. (REV 06012026)

# GA6HRSNC2

## FEATURES

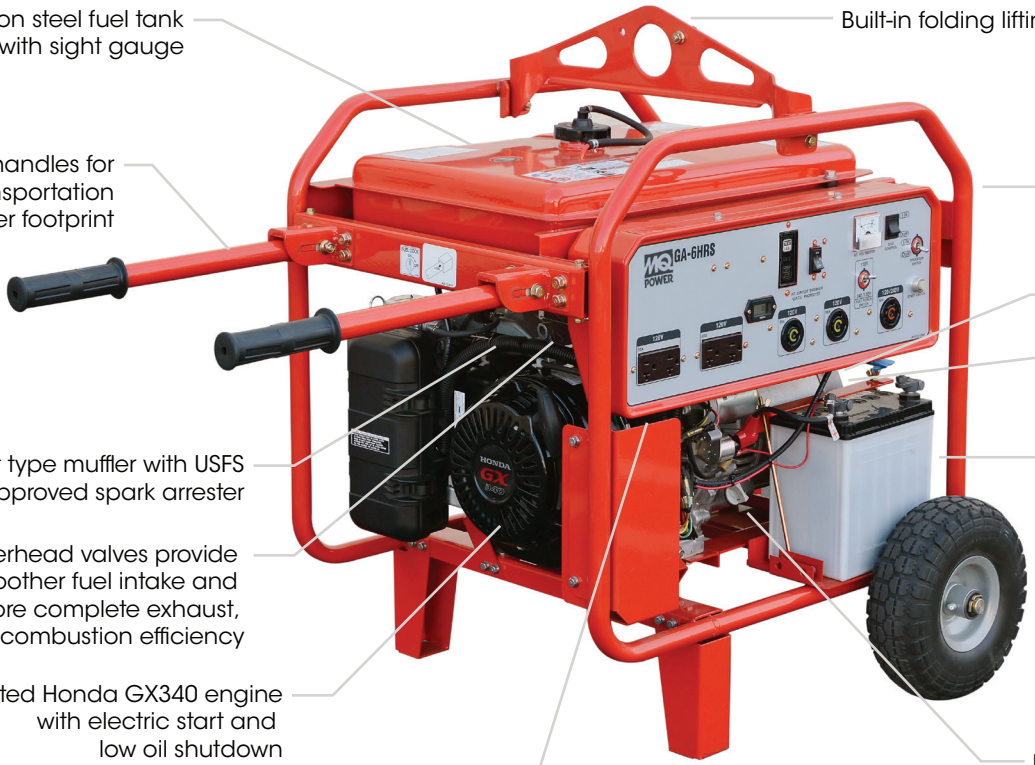


5 Gallon steel fuel tank with sight gauge

Built-in folding lifting bail

Folding handles for easy transportation and tighter footprint

Heavy-duty 1" (25.4 mm) pipe frame for durability

100% copper winding and Class B insulation

Brushless alternator provides low maintenance and dependable service

Silent type muffler with USFS approved spark arrester

GA6HRSNC2 shown with optional battery

Overhead valves provide smoother fuel intake and more complete exhaust, boosting combustion efficiency

Flat-free tires for reliable transport across rough jobsite terrain

Trusted Honda GX340 engine with electric start and low oil shutdown

Rubber vibration-isolated engine mounts help protect internal components and extend service life

Carbon monoxide sensor will shut down engine when unsafe concentrations are detected

© COPYRIGHT 2026 MULTIQUIP INC. (REV 06012026)

Breaker provides protection for 60 Hz receptacles

GFCI protection for all receptacles

Voltmeter serves as diagnostic tool

Hour meter allows accurate tracking of usage and maintenance intervals

Idle control switch to reduce fuel consumption

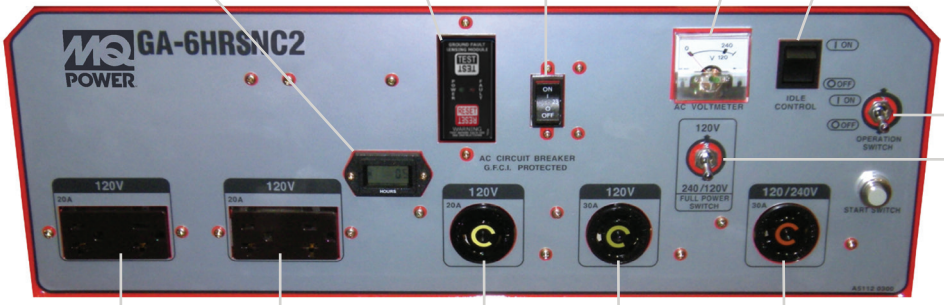


ON/OFF switch

Full power switch allows full-rated power of generator at 120V

30 Amp - 120V/240V - 60Hz Receptacle L14-30R

20 Amp - 120V - 60Hz Receptacle 5-20R

30 Amp - 120V - 60Hz Receptacle L5-30R

20 Amp - 120V - 60Hz Receptacle L5-20R

# GA6HRSNC2

## GENERATOR DIMENSIONS

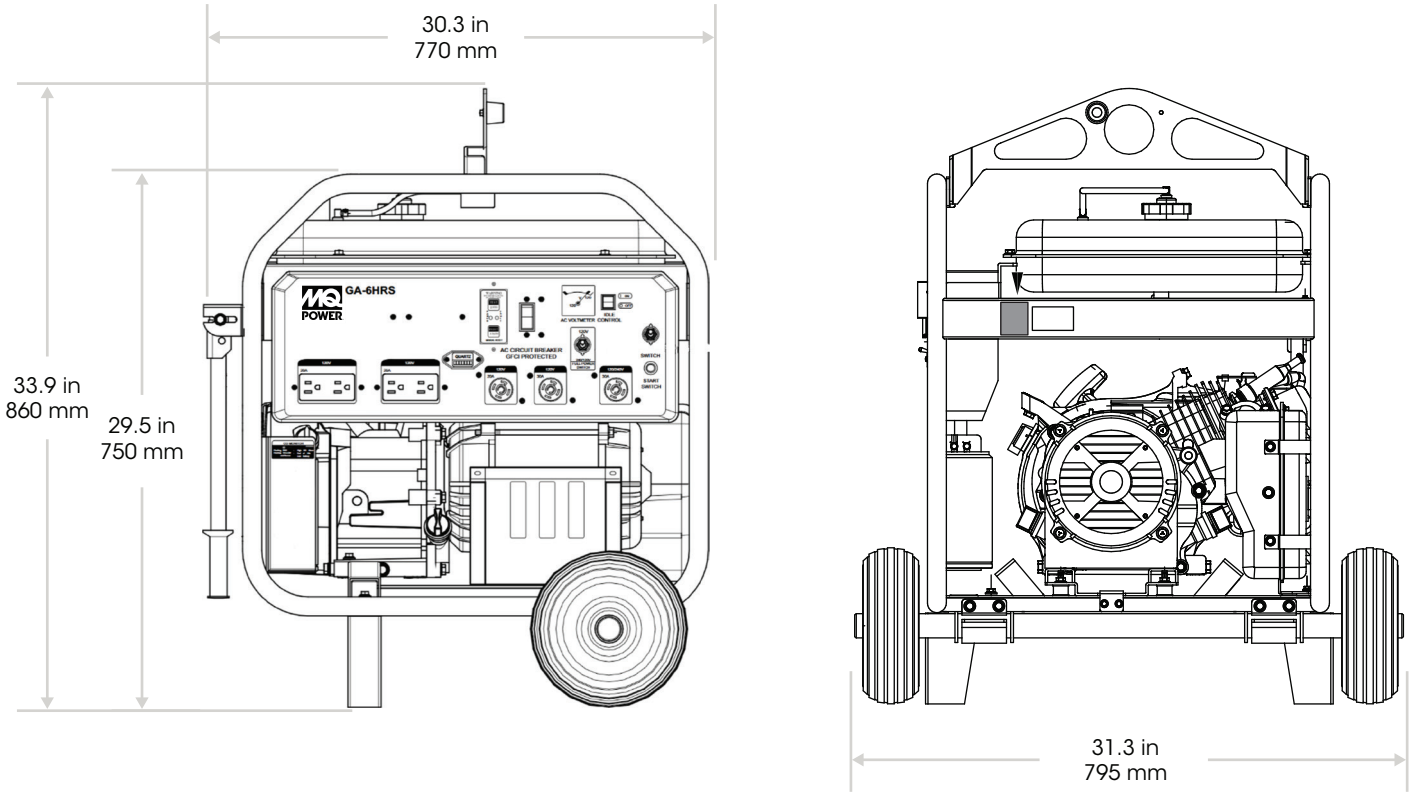


## CABLE OPTIONS

| CABLE SELECTION (60 HZ, SINGLE-PHASE OPERATION) | | | | | | |
|---|---|---|---|---|---|---|
| AMPS | LOAD IN WATTS | | MAXIMUM ALLOWABLE CABLE LENGTH | | | |
| | 120 VOLTS | 240 VOLTS | 25 FT | 50 FT | 100 FT | 150 FT |
| 2.5 | 300 | 600 | 16 AWG | 16 AWG | 14 AWG | 12 AWG |
| 5 | 600 | 1200 | 16 AWG | 14 AWG | 12 AWG | 10 AWG |
| 7.5 | 900 | 1800 | 14 AWG | 14 AWG | 12 AWG | 10 AWG |
| 10 | 1200 | 2400 | 14 AWG | 12 AWG | 12 AWG | 10 AWG |
| 15 | 1800 | 3600 | 14 AWG | 12 AWG | 12 AWG | 10 AWG |
| 20 | 2400 | 4800 | 12 AWG | 12 AWG | 10 AWG | 10 AWG |
| 25 | 3000 | 6000 | 10 AWG | 10 AWG | 10 AWG | 8 AWG |

CAUTION: Equipment damage can result from low voltage.

**Long or undersized extension cords can reduce the voltage available to your equipment, causing power loss and inefficient operation.**

When using such cords, select a cord rated for a slightly higher wattage than your device requires. Refer to the table above for recommended cord gauges and lengths based on the power demand of your electrical equipment.

© COPYRIGHT 2026 MULTIQUIP INC. (REV 06012026)

MULTIQUIP

# GA6HRSNC2

## SPECIFICATIONS

| GENERATOR SPECIFICATIONS | |
|---|---|
| MODEL | GA6HRSNC2 |
| TYPE | BRUSHLESS REVOLVING FIELD |
| EXCITATION | SOLID STATE STATICALLY EXCITED |
| INSULATION | CLASS B |
| COOLING SYSTEM | SELF-VENTILATION |
| AMBIENT TEMPERATURE RATING | 23° F – 104° F (-5° C – 40° C) |
| MAXIMUM OUTPUT | 6.0 kW |
| CONTINUOUS DUTY RATING | 5.0 kW |
| VOLTAGE | 120 / 240V |
| MAXIMUM CURRENT | 50.0 / 25.0A |
| CONTINUOUS CURRENT | 41.7 / 20.8A |
| FREQUENCY | 60 Hz |
| PHASE | SINGLE PHASE (4-WIRES) |
| POWER FACTOR | 1.0 |
| VOLTAGE REGULATION | ± 5% |
| MAIN LINE CIRCUIT BREAKER | 23.0A (2-POLE) |
| RECEPTACLES | (2) 5-20R DUPLEX, (1) L5-20R, (1) L5-30R, (1) L14-30R |
| VOLTMETER | STANDARD |
| HOUR METER | STANDARD |
| WHEEL TYPE | FLAT FREE |
| LIFTING BAIL MAX CAPACITY | 290 lb (132 kg) |

| ENGINE SPECIFICATIONS | |
|---|---|
| MAKE/MODEL | HONDA GX340 |
| EMISSIONS | EPA CERTIFIED |
| STARTING SYSTEM | ELECTRIC START AND RECOIL |
| DESIGN | AIR COOLED, 4 STROKE, SINGLE CYLINDER OHV, HORIZONTAL SHAFT |
| HORSE POWER | 10.7 |
| ENGINE SPEED | 3,600 RPM |
| SOUND LEVEL dB(A) @ 23 ft | 75 |
| GOVERNOR SYSTEM | CENTRIFUGAL MASS TYPE |
| OIL CAPACITY | 1.16 QUARTS (1.1 LITER) |
| OIL TYPE | SAE 10W-30 |
| LUBRICATION SYSTEM | SPLASH |
| LOW OIL SHUTDOWN | STANDARD |
| COOLING SYSTEM | AIR COOLING |
| BORE x STROKE | 3.46 x 2.52 in (88 x 64 mm) |
| CARBON MONOXIDE SENSOR | STANDARD |

| FUEL SYSTEM | |
|---|---|
| RECOMMENDED FUEL | UNLEADED GASOLINE |
| FUEL TANK CAPACITY | 5.0 GALLONS (19 LITERS) |
| RUN TIME (FULL LOAD) | 5.7 HOURS |
| FUEL CONSUMPTION AT FULL LOAD | 0.88 GPH (3.3 LPH) |

| WEIGHT AND DIMENSIONS | |
|---|---|
| DRY WEIGHT | 238.0 lb (108.0 kg) |
| WET WEIGHT | 271.6 lb (123.2 kg) |
| DIMENSIONS | 30.3 x 31.1 x 29.5 in (770 x 795 x 750 mm) |

## OPTIONS

### MAINTENANCE KIT

- **FKITGA6HR –** Maintenance kit includes (1) air cleaner element, (1) fuel strainer, and (1) spark plug

## GENERATOR FORMULAS (1Ø)

### AMPS, VOLTS, AND WATTS

- Amps x Volts = Watts
- Amps ÷ Watts = Volts
- Volts ÷ Watts = Amps

### STARTING AMPS vs RUNNING AMPS

- **Starting amps** (or surge amps) are the high, temporary surge of electricity (3-10 times normal) required to start a motor, lasting a few seconds
- **Running amps** are the lower, steady amount of electricity required to keep equipment operating continuously

### HORSE POWER vs WATTS

- 1 Horsepower = 746 Watts
- **EXAMPLE**: 3 Horsepower x 746 = 2,238 Watts

| TOOL WATTAGE | | |
|---|---|---|
| TOOLS | RUNNING (RATED) WATTS | STARTING (SURGE) WATTS |
| BOX FAN | 300 | 600 |
| CIRCULAR SAW | 1500 | 1500 |
| COMPUTER | 800 | 0 |
| DEEP FREEZER | 500 | 800 |
| MITER SAW | 1200 | 1800 |
| MICROWAVE | 1000 | 2000 |
| REFRIGERATOR/FREEZER | 800 | 1200 |
| TELEVISION | 500 | 0 |
| RECIPROCATING SAW | 950 | 1200 |
| SUMP PUMP | 800 | 1200 |
| WELL WATER PUMP | 1000 | 1500 |

***CAUTION:*** The generator's surge wattage is intended for **momentary startup loads only.** Connect electrical devices whose **rated (running) wattage** is **at or below** the generator's rated output. **Do not** connect any device that requires wattage equal to the generator's surge capacity.

© COPYRIGHT 2026 MULTIQUIP INC. (REV 06012026)

***NOTICE*** Features and Specifications are subject to change without notice.