

AIRLITE HRV EC

Heat recovery ventilators for commercial applications featuring advanced EC (Electronically Commutated) motor technology.

EC motor

VENTS-US

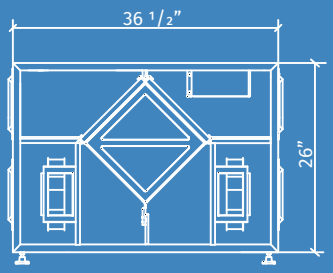

HRV 5 EC
HRV 8 EC
HRV 13 EC
HRV 17 EC
HRV 25 EC

AIRLITE heat recovery ventilators are available in five sizes with one, two or three high-efficiency EC fans in array on both supply and exhaust sides.Units are specially designed for commercial applications

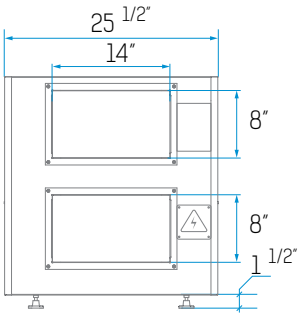

HRV 5 EC, HRV 8 EC

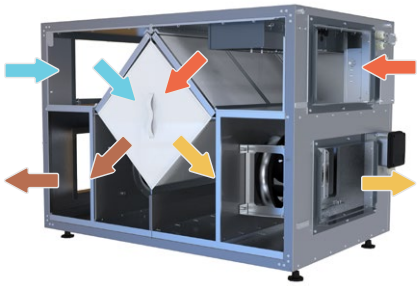

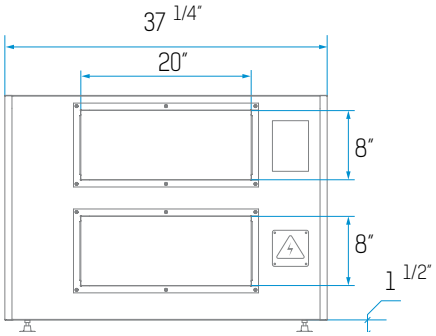

HRV 13 EC, HRV 17 EC



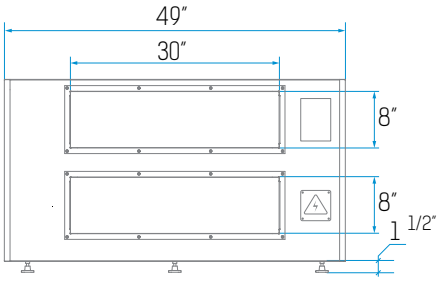

HRV 25 EC



CASING

Steel casing is covered with high quality multilayer aluminium and zinc alloy to prevent corrosion. The casing is equipped with a switch to turn the ventilator off when the service panel is opened. Service access from both left and right side. For outdoor installation the roof is necessary (optional).

HEAT RECOVERY CORE

Unique plate heat exchanger is made of polystyrene and designed for high-efficient heat recovery. The stainless steel drain pan is located on the inlet and outlet sides.

FANS

The unit is equipped with supply and exhaust centrifugal fans featuring backward-curved blades and advanced EC (Electronically Commutated) motor technology. These fans deliver superior energy efficiency and precise speed control. They come with built-in thermal overheating protection and an automatic restart function, ensuring consistent and reliable performance. Additionally, both the electric motors and impellers are dynamically balanced to minimise noise and vibration, providing smooth and efficient operation.

DEFROST SYSTEM

The fan-stop defrost mode is activated by stopping the supply fan when the outdoor air temperature drops below 23 °F (-5 °C).

FILTER

Washable MERV 8 air filters in exhaust and supply air streams as standard. Filters MERV 13 are optional.

CONTROL

The unit incorporates an integrated automation and control system with following functions:

- Operation mode switch.
- Airflow balancing by supply and exhaust fan independent speed adjustment.
- Automatic recovery core frost protection.
- External control device connection.

TECHNICAL DATA

Parameters	AIRLITE HRV 5 EC	AIRLITE HRV 8 EC	AIRLITE HRV 13 EC
Voltage [V / 60 Hz]	1 ~ 208	1 ~ 208	1 ~ 208
Unit power [W]	330	480	650
Full Load Amps [A]	4.2	5.4	8.3
Minimum circuit Amps [MCA]	5.25	6.8	10.4
Maximum over current protection [MOP]	15	15	15
Sensible effectiveness @ max airflow [%]	62	58	61
Air flow @ ESP 0.4" WG [cfm]	450	610	760
Air flow max [cfm]	520	680	850
Transported air temperature [F]	+5 up to +90	+5 up to +90	+5 up to +90
Outer skin casing material	21 gauge galvanized steel	21 gauge galvanized steel	21 gauge galvanized steel
Insulation	1" mineral wool	1" mineral wool	1" mineral wool
Connected air duct size [in]	8×14	8×14	8×20

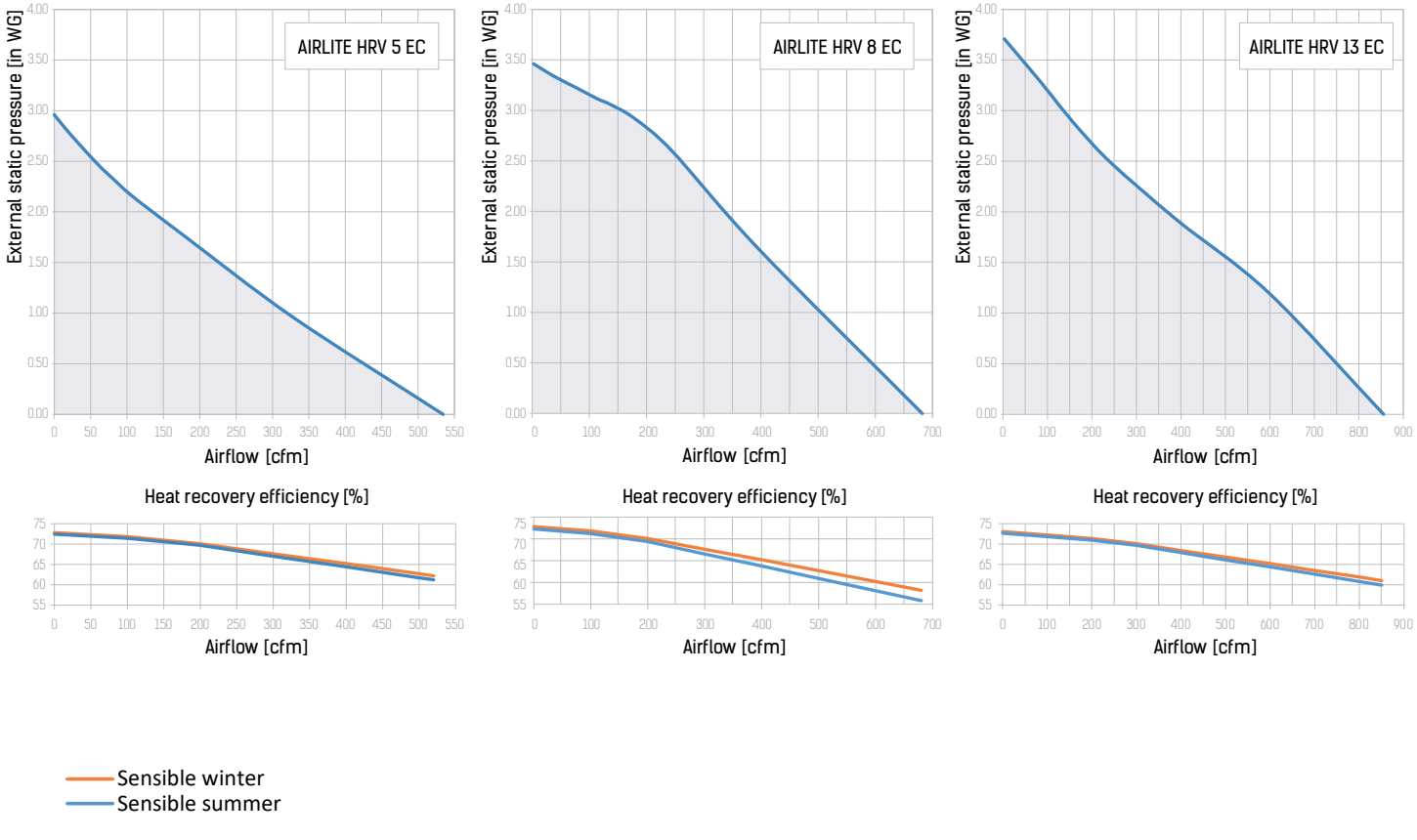

TECHNICAL DATA

Parameters	AIRLITE HRV 17 EC	AIRLITE HRV 25 EC
Voltage [V / 60 Hz]	1 ~ 208	1 ~ 208
Unit power [W]	940	1385
Full Load Amps [A]	10.8	16.2
Minimum circuit Amps [MCA]	13.5	20.2
Maximum over current protection [MOP]	20	25
Sensible effectiveness @ max airflow [%]	53	51
Air flow @ ESP 0.4" WG [cfm]	1220	1700
Air flow max [cfm]	1360	1950
Transported air temperature [F]	+5 up to +90	+5 up to +90
Outer skin casing material	21 gauge galvanized steel	21 gauge galvanized steel
Insulation	1" mineral wool	1" mineral wool
Connected air duct size [in]	8×20	8×30

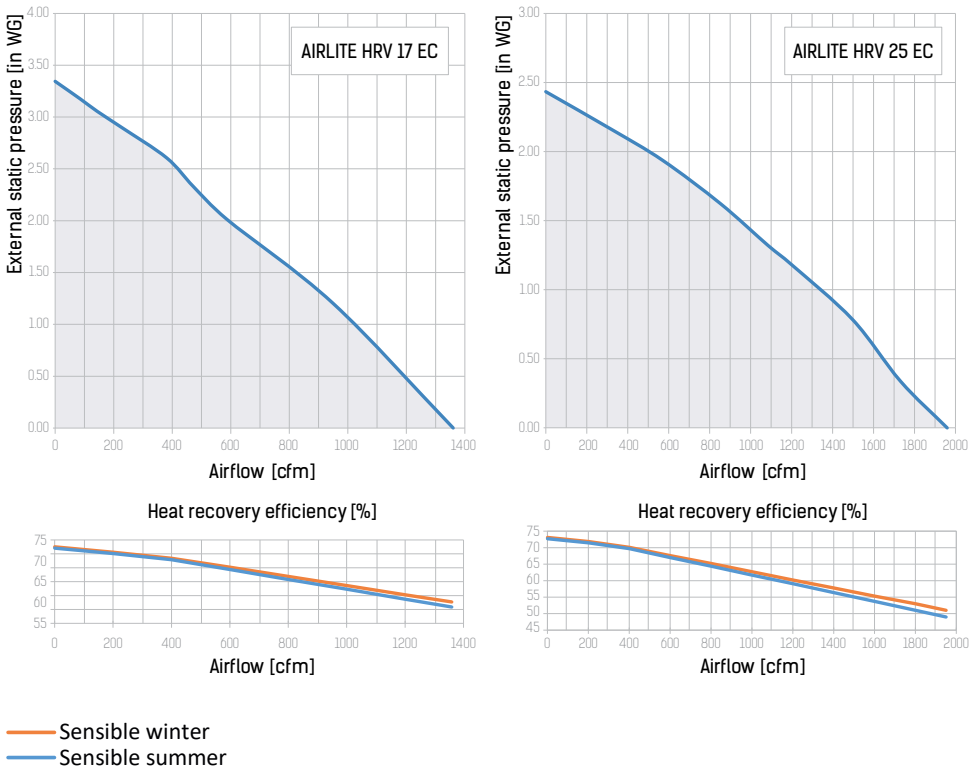

VENTS-US reserves the rights to modify any of its products' features, designs, components and specifications at any time and without notice to maintain the development and quality of manufactured goods.

Tel: 888-640-0925
Fax: 513-268-4597
Sales@vents-us.com
Vents-US.com
400 Murray Road, Cincinnati,
OH 45217