

AIRLITE HRV

Heat recovery ventilators
for commercial applications

VENTS-US

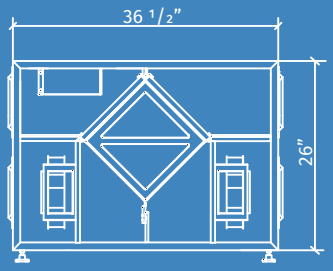

HRV 5
HRV 8
HRV 13
HRV 17
HRV 25

AIRLITE heat recovery ventilators are available in five sizes with one, two or three fans in array on both supply and exhaust sides. Units are specially designed for commercial applications.

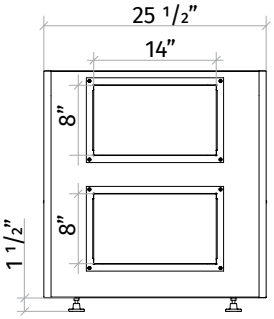

HRV 5, HRV 8

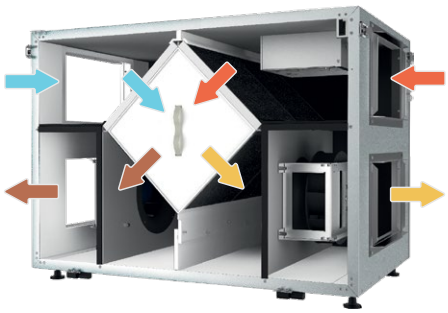

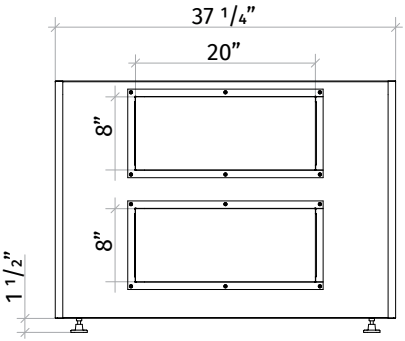

HRV 13, HRV 17

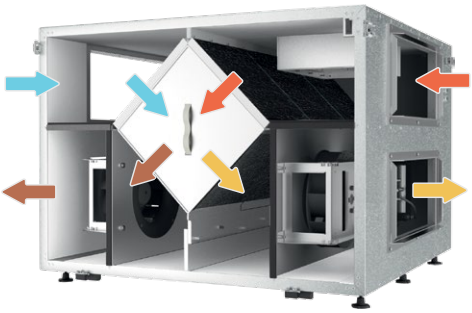

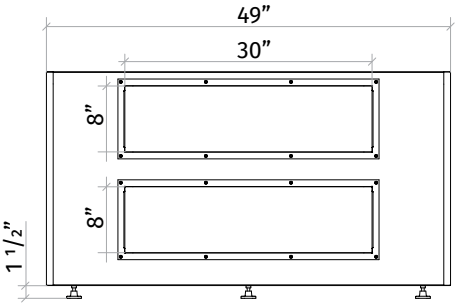

HRV 25

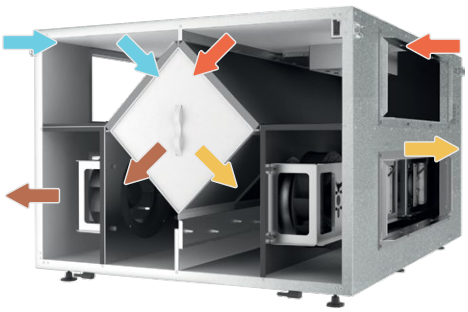

CASING

Steel casing is covered with high quality multilayer aluminium and zinc alloy to prevent corrosion. The casing is equipped with a switch to turn the ventilator off when the service panel is opened. Service access from both left and right side. For outdoor installation the roof is necessary (optional).

HEAT RECOVERY CORE

Unique plate heat exchanger is made of polystyrene and designed for high-efficient heat recovery. The stainless steel drain pan is located on the inlet and outlet sides.

FANS

The unit is equipped with supply and exhaust centrifugal fans with backward curved blades and built-in thermal overheating protection with automatic restart. The electric motors and impellers are dynamically balanced.

DEFROST SYSTEM

The fan-stop defrost mode is activated by stopping the supply fan when the outdoor air temperature drops below 23 °F (-5 °C).

FILTER

Washable MERV 8 air filters in exhaust and supply air streams as standard. Filters MERV 13 are optional.

CONTROL

The unit incorporates an integrated automation and control system with following functions:

- Operation mode switch.
- Airflow balancing by supply and exhaust fan independent speed adjustment.
- Automatic recovery core frost protection.
- External control device connection.

RECOGNIZED COMPONENT
Intertek

TECHNICAL DATA

Parameters	AIRLITE HRV 5	AIRLITE HRV 8	AIRLITE HRV 13
Voltage [V / 60 Hz]	1 ~ 120	1 ~ 120	1 ~ 120
Unit power [W]	460	640	880
Full Load Amps [A]	4.2	5.4	8.3
Minimum circuit Amps [MCA]	5.2	6.8	10.4
Maximum over current protection [MOP]	15	15	15
Sensible effectiveness @ max airflow [%]	66	54	63
Air flow @ ESP 0.4" WG [cfm]	300	450	610
Air flow max [cfm]	350	510	700
Transported air temperature [F]	+5 up to +90	+5 up to +90	+5 up to +90
Outer skin casing material	21 gauge galvanized steel	21 gauge galvanized steel	21 gauge galvanized steel
Insulation	1" mineral wool	1" mineral wool	1" mineral wool
Connected air duct size [in]	8×14	8×14	8×20

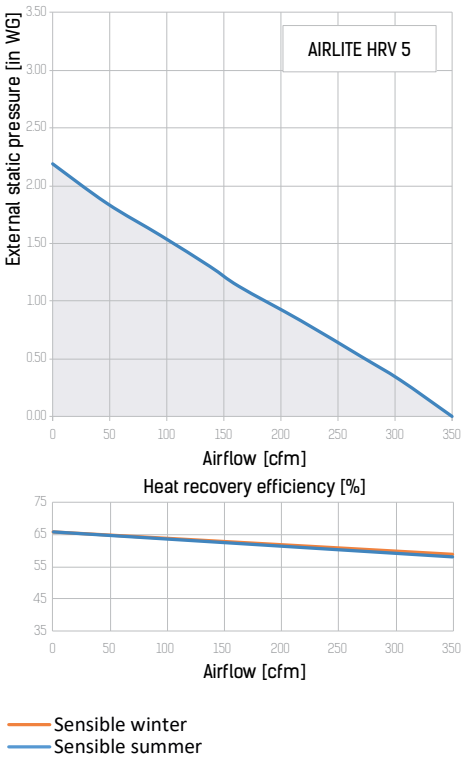

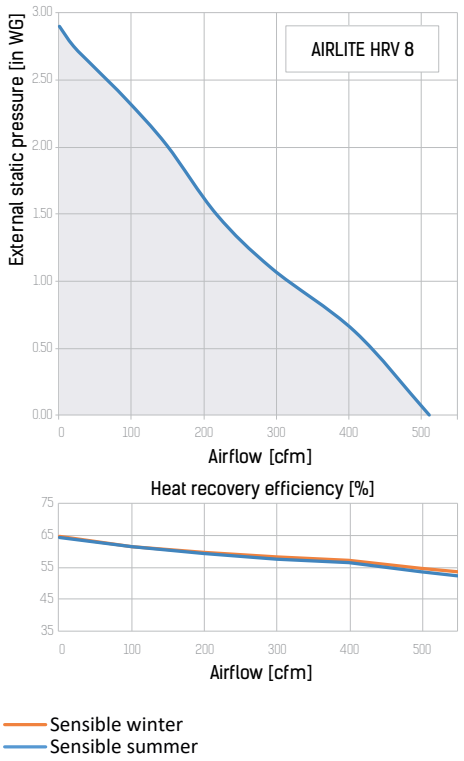

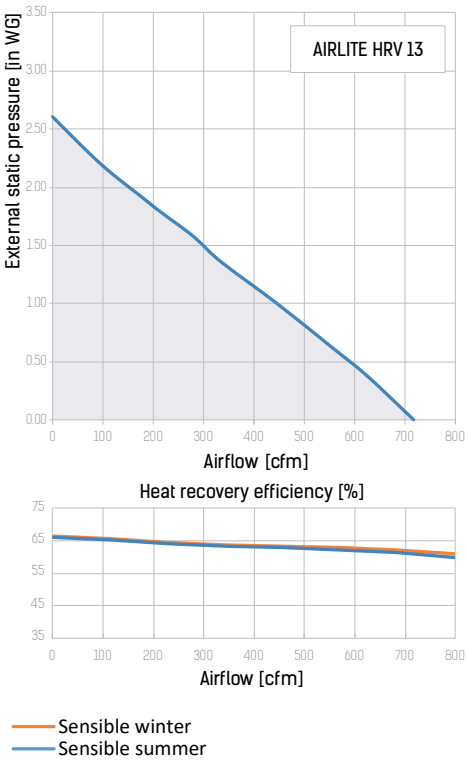

TECHNICAL DATA

Parameters	AIRLITE HRV 17	AIRLITE HRV 25
Voltage [V / 60 Hz]	1 ~ 120	1 ~ 120
Unit power [W]	1330	2010
Full Load Amps [A]	10.8	16.2
Minimum circuit Amps [MCA]	13.5	20.2
Maximum over current protection [MOP]	20	25
Sensible effectiveness @ max airflow [%]	56	55
Air flow @ ESP 0.4" WG [cfm]	1000	1600
Air flow max [cfm]	1135	1785
Transported air temperature [F]	+5 up to +90	+5 up to +90
Outer skin casing material	21 gauge galvanized steel	21 gauge galvanized steel
Insulation	1" mineral wool	1" mineral wool
Connected air duct size [in]	8×20	8×30

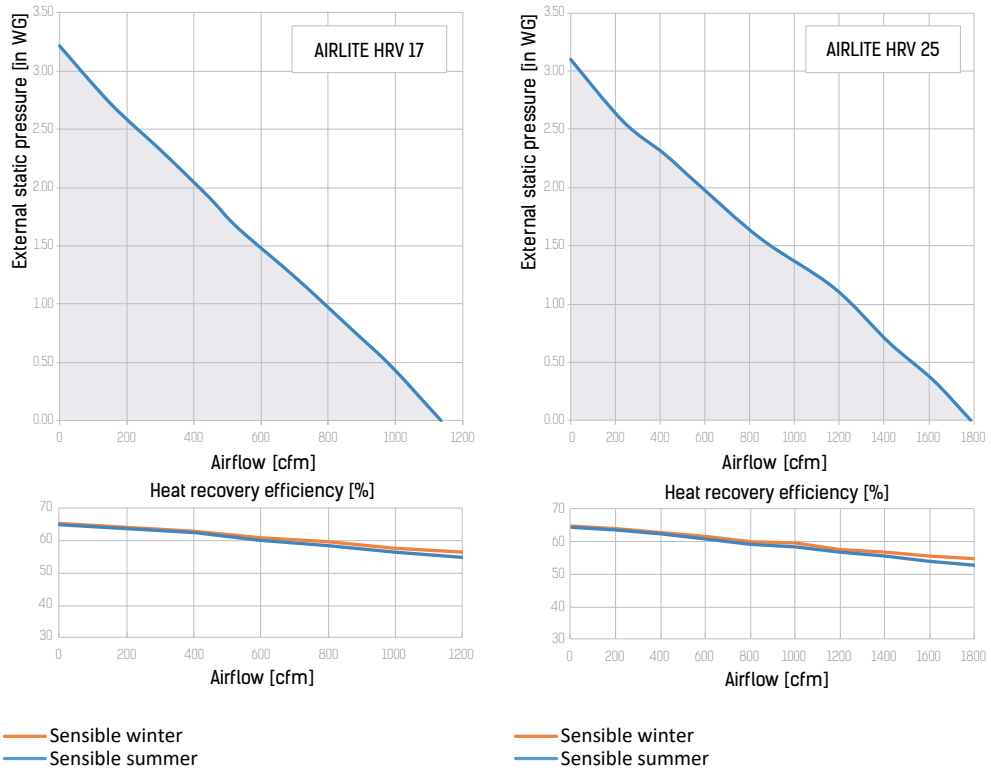

VENTS-US reserves the rights to modify any of its products' features, designs, components and specifications at any time and without notice to maintain the development and quality of manufactured goods.

Tel: 888-640-0925
Fax: 513-583-5786
Sales@Vents-us.com
Vents-US.com
400 Murray Road, Cincinnati,
OH 45217