electricSchwank
Electric Indoor/Outdoor Overhead Patio Heaters

POLE MOUNT UNIT
39" OR 61 1/4" HEATERS

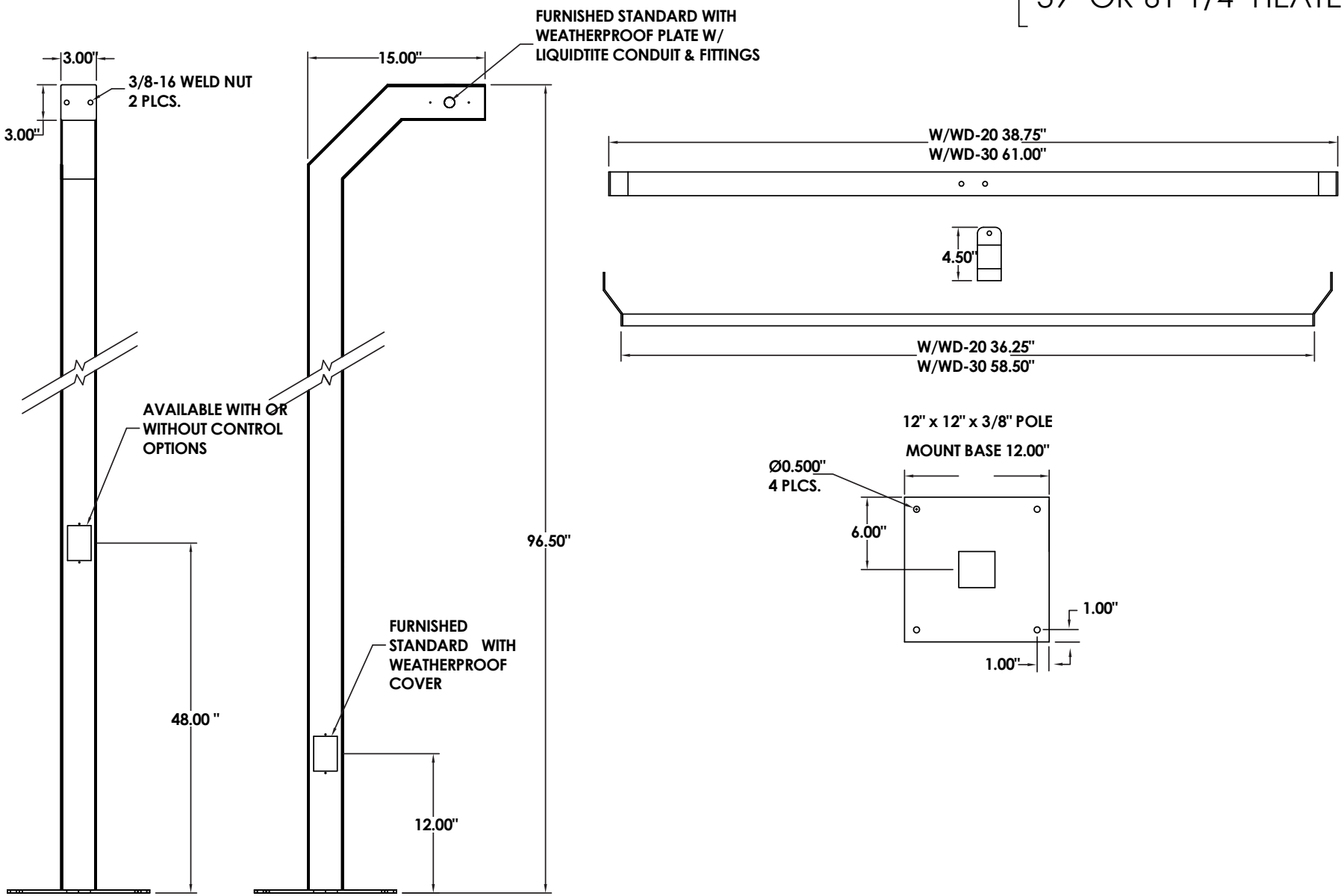

patioSchwank

1-877-446-3727 | csr@patioschwank.com | www.patioschwank.com

SCALE: N/A
ITEM #: Call for item number